Ethernet Standard PLC

C0-11ARE-D $226.00

8 AC Input/6 Relay Output Micro PLC

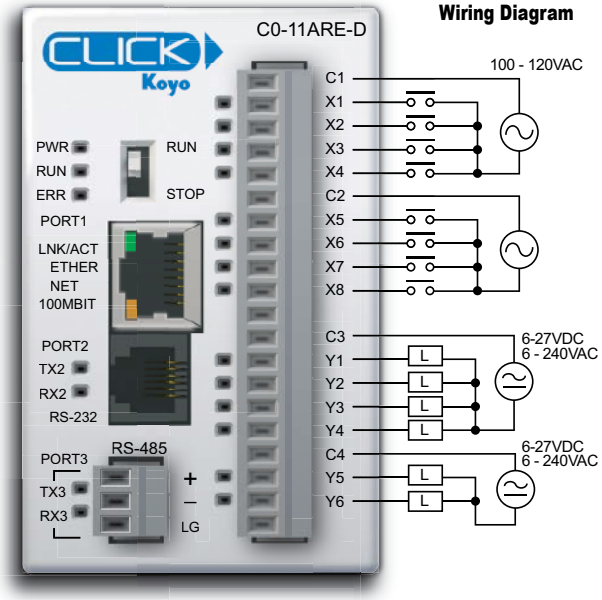

NOTE: When using Ethernet Standard PLCs, you must use CLICK programming software version V2.00 or later.

Equivalent Input Circuit

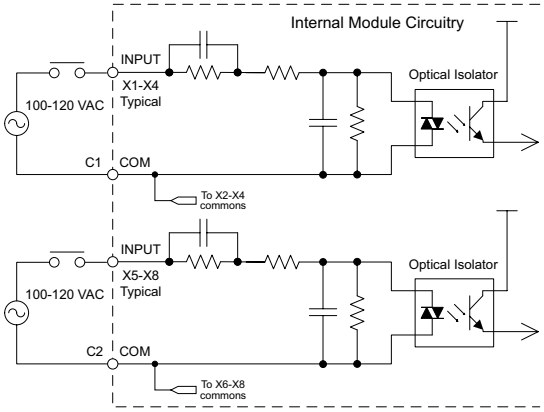

Equivalent Output Circuit

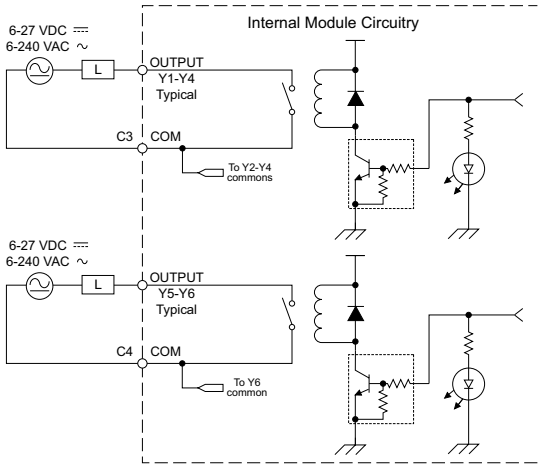

Built-in I/O Specifications - Inputs

Inputs per Module	8
Operating Voltage Range	100-120 VAC
Input Voltage Range	80-144 VAC
AC Frequency	47-63 Hz
Input Current	8.5 mA @ 100VAC at 50Hz 10mA @ 100VAC at 60Hz
Maximum Input Current	16mA @ 144VAC
Input Impedance	15kΩ @ 50Hz 12kΩ @ 60Hz
ON Voltage Level	> 60VAC
OFF Voltage Level	< 20VAC
Minimum ON Current	5mA
Maximum OFF Current	2mA
OFF to ON Response	< 40ms
ON to OFF Response	< 40ms
Status Indicators	Logic Side (8 points, green LED)
Commons	2 (4 points/common) Isolated

Built-in I/O Specifications - Outputs

Outputs per Module	6
Operating Voltage Range	6-240 VAC (47-63 Hz), 6-27 VDC
Output Voltage Range	5-264 VAC (47-63 Hz), 5-30 VDC
Output Type	Relay, form A (SPST)
Maximum Current	1 A/point; C3: 4A/common, C4: 2A/common
Minimum Load Current	5mA @ 5VDC
Maximum Inrush Current	3A for 10ms
OFF to ON Response	< 15ms
ON to OFF Response	< 15ms
Status Indicators	Logic Side (6 points, red LED)
Commons	2 (4 points/com & 2 points/com) Isolated

General Specifications

Current Consumption at 24VDC	140mA
Terminal Block Replacement Part No.	C0-16TB
Drawing Link	PDF
Weight	5.6 oz [160g]

Typical Relay Life (Operations) at Room Temperature

Voltage & Load Type	***Relay Life****
30VDC 1A Resistive	300,000 cycles
30VDC 1A Solenoid	50,000 cycles
250VAC 1A Resistive	500,000 cycles
250VAC 1A Solenoid	200,000 cycles

*ON to OFF = 1 cycle

ZIPLink Pre-Wired PLC Connection Cables and Modules for CLICK PLC

20-pin connector cable
ZL-C0-CBL20 (0.5 m length)
ZL-C0-CBL20-1 (1.0 m length)
ZL-C0-CBL20-2 (2.0 m length)

ZL-RTB20
20-pin feed-through connector module

C0-11ARE-D Temperature Derating Chart

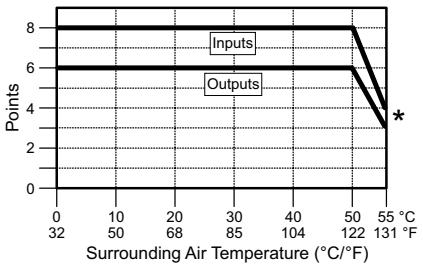

* Use every other input/output.

CLICK PLC Specifications

General Specifications For All CLICK PLC Products

These general specifications apply to all CLICK PLCs and optional power supply products. Please refer to the appropriate I/O temperature derating charts under both the PLC and I/O module specifications to determine best operating conditions based on the ambient temperature of your particular application.

General Specifications	
Operating Temperature	Analog, analog combo I/O modules only: 32°F to 140°F [0°C to 60°C]; All other modules: 32°F to 131°F [0°C to 55°C], IEC 60068-2-14 (Test Nb, Thermal Shock)
Storage Temperature	–4°F to 158°F [–20°C to 70°C] IEC 60068-2-1 (Test Ab, Cold) IEC 60068-2-2 (Test Bb, Dry Heat) IEC 60068-2-14 (Test Na, Thermal Shock)
Ambient Humidity	30% to 95% relative humidity (non–condensing)
Environmental Air	No corrosive gases. Environmental pollution level is 2 (UL840)
Vibration	MIL STD 810C, Method 514.2, EC60068-2-27, Category [f], Procedure[VIII] JIS C60068-2-27 (Sine wave vibration test)
Shock	MIL STD 810C, Method 516.2, IEC60068-2-27, JIS C60068-2-27, Category [f], Procedure[VIII]
Noise Immunity	<EN61131-2> EN61000-4-2 (ESD) EN61000-4-3 (RFI) EN61000-4-4 (FTB) EN61000-4-5 (Surge) EN61000-4-6 (Conducted) EN61000-4-8 (Power frequency magnetic field immunity) <Local Test> Impulse noise 1µs, 1000V RFI: No interference measured at 150 and 450 MHz (5w/15cm)
Emissions	EN55011:1998 Class A; EN61000-6-4:2007+A1:2011
Agency Approvals	UL508, UL61010-2-201 (File No. E157382, E316037); CE (EN61131-2); CUL Canadian C22.2
Other	RoHS 2011/65/EU Amendment (EU)2015/863

CLICK PLC Specifications

PLC Unit Specifications

Ethernet Basic, Standard and Analog PLC Unit Specifications			
	Ethernet Basic PLC	***Ethernet Standard PLC***	***Ethernet Analog PLC***
Control Method	Stored Program/Cyclic execution method	Stored Program/Cyclic execution method	Stored Program/Cyclic execution method
I/O Numbering System	Fixed in Decimal	Fixed in Decimal	Fixed in Decimal
Ladder Memory (steps)	8000	8000	8000
Total Data Memory (words)	8000	8000	8000
Contact Execution (Boolean)	< 0.2 µs	< 0.2 µs	< 0.2 µs
Typical Scan (1K Boolean)	< 1ms	< 1ms	< 1ms
RLL Ladder Style Programming	Yes	Yes	Yes
Run Time Edits	Yes	Yes	Yes
Scan	Variable / fixed	Variable / fixed	Variable / fixed
CLICK Programming Software for Windows	Yes	Yes	Yes
Built-in Communication Ports	Yes (one Ethernet port and one RS-232 port)	Yes (one Ethernet port, one RS-232 port and one RS-485 port)	Yes (one Ethernet port, one RS-232 port and one RS-485 port)
Protocols	Modbus RTU (master/slave) and ASCII (in/out), Modbus TCP (client/server), EtherNet/IP Implicit and Explicit (adapter server)		
FLASH Memory	Standard on PLC	Standard on PLC	Standard on PLC
Built-in Discrete I/O points	8 inputs, 6 outputs	8 inputs, 6 outputs	4 inputs, 4 outputs
Built-in Analog I/O Channels	No	No	2 or 4 inputs; 2 outputs
Number of High-Speed Input Points	4	8	4
Number of High-Speed Counters	4	6	4
PID Control Loops	8	8	8
Number of Instructions Available	21	21	21
Control Relays	2000	2000	2000
System Control Relays	1000	1000	1000
Timers	500	500	500
Counters	250	250	250
Interrupts	Yes (external: 8 / timed: 4)	Yes (external: 8 / timed: 4)	Yes (external: 4 / timed: 4)
Subroutines	Yes	Yes	Yes
For/Next Loops	Yes	Yes	Yes
Math (Integer and Hex)	Yes	Yes	Yes
Drum Sequencer Instruction	Yes	Yes	Yes
Internal Diagnostics	Yes	Yes	Yes
Password Security	Yes	Yes	Yes
System Error Log	Yes	Yes	Yes
User Error Log	No	No	No
Memory Backup	Super Capacitor + Battery	Super Capacitor + Battery	Super Capacitor + Battery
Battery Backup	Yes (battery part # D2-BAT-1)	Yes (battery part # D2-BAT-1)	Yes (battery part # D2-BAT-1)
Calendar/Clock	Yes	Yes	Yes
I/O Terminal Block Replacement	AutomationDirect p/n C0-16TB	AutomationDirect p/n C0-16TB	AutomationDirect p/n C0-16TB
Communication Port & Terminal Block Replacement	N/A	AutomationDirect p/n C0-3TB	AutomationDirect p/n C0-3TB
24VDC Power Terminal Block Replacement	AutomationDirect p/n C0-4TB	AutomationDirect p/n C0-4TB	AutomationDirect p/n C0-4TB

CLICK Specifications

CLICK PLC Hardware/Software Compatibility

CLICK PLCs require a minimum software version of v2.50 for the PID function. The table below shows the most recent software and hardware versions required for the High-Speed input operation capability to be accessible.

CLICK PLC Features Software Compatibility

CPU Type	Part Number	Minimum CLICK Software Version				
		Hardware	High-Speed Inputs	EtherNet/IP	PID	DHCP
Basic	C0-00DD1-D	v1.00	N/A	N/A	N/A	N/A
	C0-00DD2-D					
	C0-00DR-D					
	C0-00AR-D					
Standard	C0-01DD1-D	v1.20	N/A	N/A	N/A	N/A
	C0-01DD2-D					
	C0-01DR-D					
	C0-01AR-D					
Analog	C0-02DD1-D (before SN 171208001)	v1.12	N/A	N/A	N/A	N/A
	C0-02DD1-D (after SN 171208001)	v2.10				
	C0-02DD2-D (before SN 174018001)	v1.12				
	C0-02DD2-D (after SN 174018001)	v2.10				
	C0-02DR-D (before SN 173158001)	v1.12				
	C0-02DR-D (after SN 173158001)	v2.10				
Ethernet CPUs	Ethernet CPUs require v2.40 for EtherNet/IP communications					
Ethernet Basic	C0-10DD1E-D	v2.00	v2.30	v2.40	v2.50	v3.00
	C0-10DD2E-D					
	C0-10DRE-D					
	C0-10ARE-D		N/A			
Ethernet Standard	C0-11DD1E-D	v2.00	v2.30	v2.40	v2.50	v3.00
	C0-11DD2E-D					
	C0-11DRE-D					
	C0-11ARE-D		N/A			
Ethernet Analog	C0-12DD1E-D	v2.20	v2.30	v2.40	v2.50	v3.00
	C0-12DD2E-D					
	C0-12DRE-D					
	C0-12ARE-D		N/A			
	C0-12DD1E-1-D		v2.30			
	C0-12DD2E-1-D					
	C0-12DRE-1-D					
	C0-12ARE-1-D		N/A			
	C0-12DD1E-2-D		v2.30			
	C0-12DD2E-2-D					
	C0-12DRE-2-D					
	C0-12ARE-2-D		N/A			
I/O Modules	C0-08NE3	v1.20	N/A	N/A	N/A	N/A
	C0-16NE3					
	C0-04AD-1	v1.40				
	C0-04AD-2					
	C0-04DA-1					
	C0-04DA-2					
	C0-4AD2DA-1					
	C0-4AD2DA-2					
	C0-04RTD					
	C0-04THM					
	C0-08CDR					
	C0-16CDD1					
	C0-16CDD2					
	Other modules	v1.00				

For the latest prices, please check AutomationDirect.com.

CLICK PLC Family Overview

What you'll need

Of course, what you'll need for your system depends on your particular application, but this overview shows you what you'll need for a simple system.

1. ***Select your CLICK or CLICK PLUS PLC unit.***

2. ***If using a CLICK PLUS PLC, select an Option Slot Module if desired.***

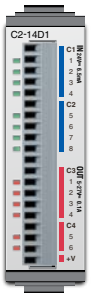

3. ***If you need additional I/O, select from 24 different types of Stackable I/O modules.***

4. ***Select a 24VDC power supply.***

or

5. ***Download the FREE CLICK programming software. support.automationdirect.com/products/clickplcs.html***

6. ***Download the FREE CLICK mobile app. The CLICK mobile app is available for iOS and Android. It can connect to your C2-02CPU or C2-03CPU over Bluetooth to provision the PLC onto a Wi-Fi network. (PLC requires an external antenna)***

Download on the App Store

GET IT ON Google Play

CLICK PLC Family Overview

What you'll need (continued)

7. ***Select your PC-to-PLC programming cable.***
If your PC has a USB port, use cable EA-MG-PGM-CBL to connect to the PLC port. If your PC has a 9-pin serial communications port, use programming cable D2-DSCBL. If your PC has an Ethernet port, use C5E-STPYL-C3 (crossover) or C5E-STPYL-S3 (straight through) Ethernet cable. If your PC is on a network with a wireless access point, you can connect using one of our Wi-Fi anteannas.

USB-CBL-AMICB6

USB A to USB microB Programming Cable Assembly (CLICK PLUS Only)

C5E-STPYL-C3 (crossover)
C5E-STPYL-S3 (straight through)

For Ethernet PLC Unit

or

SE-ANT250
Wi-Fi/Bluetooth Dome Antenna (C2-02CPU & C2-03CPU only)

or

SE-ANT210
Wi-Fi/Bluetooth Whip Antenna (C2-02CPU & C2-03CPU only) (nonmetal enclosure only)

D2-DSCBL

(PC requires RS-232 port to use this cable)

or

EA-MG-PGM-CBL

Connects to PC USB Port

8. ***Select tools, wire, and provide power.***

Screwdriver
TW-SD-MSL-2

Wire Strippers
DN-WS

Hookup Wire

Power Supplies

Power Supplies

The CLICK PLC family offers two 24VDC power supplies. They are identical except for the output current.

It is not mandatory to use one of these CLICK power supplies for the CLICK/CLICK PLUS PLC system. You can use any other 24VDC power supply that Automationdirect.com offers, including the PSP24-DC12-1 12 to 24 VDC converter shown below.

***C0-00AC* Power Supply**
Limited auxiliary AC power supply allows you to power the 24VDC CLICK C0 and C2 series PLCs with 100–240 VAC supply power. The 0.5 A DC power supply is capable of controlling the PLC plus a limited configuration based on the power budget of each I/O module. The C0-00AC is a low-cost solution for applications requiring only minimal I/O and power consumption. This power supply will not support a fully-populated CLICK PLC system with all possible I/O module combinations.

***C0-01AC* Power Supply**
Expanded auxiliary AC power supply allows you to power the 24VDC CLICK C0 and C2 series PLCs with 100–240 VAC supply power. The 1.3 A DC power supply is capable of supporting a fully-populated CLICK PLC system with all possible I/O module
combinations, with no concerns for exceeding the power budget.

***PSP24-DC12-1* DC-DC Converter**
With this DC-DC converter you can operate the CLICK/CLICK PLUS PLC with 12VDC input power.

C0-00AC

C0-01AC

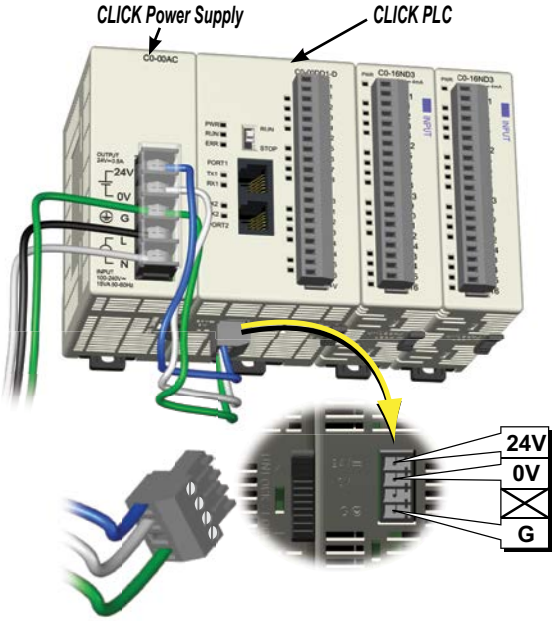

24VDC power is supplied to the PLC unit through wiring connected from the power supply output to the 4-pin 24VDC input connector located on the bottom of the PLC unit.

CLICK 24VDC Power Supply Ratings

Part Number	Output Current	Price
C0-00AC	0.5 A	$51.00
C0-01AC	1.3 A	$63.00

Power Supply Input Specifications

Part Number	C0-00AC	C0-01AC
Input Voltage Range	85–264 VAC	
Input Frequency	47–63 Hz	
Input Current (typical)	0.3 A @ 100VAC, 0.2 A @ 200VAC	0.9 A @ 100VAC, 0.6 A @ 200VAC
Inrush Current	30A	
Efficiency	80% typical	

Power Supply Output Specs

Part Number	C0-00AC	C0-01AC
Output Voltage Range	23–25 VDC	
Output Current	0.5 A	1.3 A
Ripple	200mV p-p max (0–55°C)	
Ripple Noise	300mV p-p max (0–55°C)	
Over Current Protection	@ 0.65 A (automatic recovery)	@ 1.6 A (automatic recovery)
Over Voltage Protection	@ 27.6 V (clamped by Zener diode)	
Start-up Time	1000ms max at rated input and load	
Hold-up Time	10ms minimum at 85VAC, I=max	

Power Supply General Specs

Part Number	C0-00AC	C0-01AC
Ambient Operating Temperature	32–131°F [0–55°C]	
Storage Temperature	-4–158°F [-20–70°C]	
Humidity	30–95%, non-condensing	
Vibration Resistance	JIS C60068-2-6, sine wave vibration	
Shock Resistance	JIS C60068-2-27	
Voltage Withstand Input-Output Input-Ground Output-Ground	 1500VAC, 5mA cutoff current 1500VAC, 5mA cutoff current 500VAC, 5mA cutoff current	
Insulation Resistance Input-Output Input-Ground Output-Ground	 10MΩ minimum, 500VDC 10MΩ minimum, 500VDC 5MΩ minimum, 500VDC	
Noise Immunity	FCC Class A, EN55022:1998 Class A	
Input/Output Interface	5P terminal block, Fujicon UF2362AX series or equivalent	
Agency Approvals	UL508, UL1604, EN61010-1 (IEC 1010-1), CAN/CSA E60079-15:02, JIS C0025	
Drawing Link	PDF	PDF
Weight	5.3 oz [150g]	6.0 oz [170g]

PSP24-DC12-1

PSP24-DC12-1 DC-DC Converter Specs

Input Voltage Range	9.5–18 VDC
Input Power (no load)	1.0 W max.
Startup Voltage	8.4 VDC
Undervoltage Shutdown	7.6 VDC
Output Voltage Range	24–28 VDC (adjustable)
Output Current	1.0 A
Short Circuit Protection	Current limited at 110% typical
Drawing Link	PDF
Weight	7.5 oz [213g]

ZIPLink™ Wiring System for CLICK PLC Family

Wiring Solutions using the *ZIP*Link Wiring System

ZIPLinks eliminate the normally tedious process of wiring between devices by utilizing prewired cables and DIN rail mount connector modules. It's as simple as plugging in a cable connector at either end or terminating wires at only one end. Prewired cables keep installation clean and efficient, using half the space at a fraction of the cost of standard terminal blocks.

ZIPLinks are available in a variety of styles to suit your needs, including feedthrough connector module. ***ZIP***Links are available for all Basic, Standard and Ethernet CLICK PLC units, select CLICK PLUS option slot modules, and most discrete and analog stackable I/O modules. Pre-printed I/O-specific adhesive label strips for quick marking of ***ZIP***Link modules are provided with ***ZIP***Link cables.

Solution 1: CLICK PLC, CLICK PLUS PLC with Option Slot Module, and Stackable I/O Modules to ZIPLink Connector Modules

When looking for quick and easy I/O-to-field termination, a ***ZIP***Link connector module used in conjunction with a prewired ***ZIP***Link cable, consisting of an I/O terminal block at one end and a multi-pin connector at the other end, is the best solution.

Use the "CLICK PLC PLC Unit ***ZIP***Link Selector" table and CLICK I/O ***ZIP***Link selector tables located in this section:

- Locate your PLC or I/O module.
- Select a ***ZIP***Link Module.
- Select a corresponding ***ZIP***Link Cable.

Solution 2: CLICK/CLICK PLUS PLC I/O to 3rd Party Devices

When wanting to connect PLC I/O (built-in, option slot module, or stackable) to another device within close proximity, no extra terminal blocks are necessary when using the ***ZIP***Link Pigtail Cables. ***ZIP***Link Pigtail Cables are prewired to an I/O terminal block with color-coded pigtail with soldered-tip wires on the other end.

Use the I/O Modules to 3rd Party Devices selector tables located in the ***ZIP***Link section:

- Locate your PLC or I/O module.
- Select a ***ZIP***Link Pigtail Cable that is compatible with your 3rd party device

Solution 3: GS Series and DuraPulse Drives Communication Cables

Need to communicate via Modbus RTU to a drive or a network of drives?

ZIPLink cables are available in a wide range of configurations for connecting to PLCs and SureServo, SureStep, Stellar Soft Starter and AC drives. Add a ***ZIP***Link communications module to quickly and easily set up a multi-device network.

Use the Drives Communication selector tables located in the ***ZIP***Link section:

- Locate your Drive and type of communications.
- Select a ***ZIP***Link cable and other associated hardware.

Solution 4: Serial Communications Cables

ZIPLink offers communications cables for use with CLICK PLCs and select CLICK PLUS PLCs that can also be used with other communications devices. Connections include a 6-pin RJ12 connector which can be used in conjunction with the RJ12 Feedthrough module.

Use the Serial Communications Cables selector table located in the ***ZIP***Link section:

- Locate your connector type
- Select a cable.

ZIPLink™ Wiring System for CLICK PLC Family

AUTOMATIONDIRECT.com

CLICK PLC & CLICK PLUS Option Slot *ZIP*Link Selector

PLC or Option Slot Module		ZIPLink			
CLICK PLC Unit	CLICK PLUS Option Slot Module	# of Terms	Component	Module Part No.	Cable Part No.
C0-00DD1-D	NA	20	Feedthrough	ZL-RTB20, ZL-RTB20-1	ZL-C0-CBL20 *
C0-00DD2-D	NA				
C0-00DR-D	NA				
C0-00AR-D	NA				
C0-01DD1-D	NA				
C0-01DD2-D	NA				
C0-01DR-D	NA				
C0-01AR-D	NA				
C0-02DD1-D	NA	No *ZIP*Links are available for CLICK Analog PLC units.			
C0-02DD2-D	NA				
C0-02DR-D	NA				
C0-10DD1E-D	NA	20	Feedthrough	ZL-RTB20, ZL-RTB20-1	ZL-C0-CBL20 *
C0-10DD2E-D	NA				
C0-10DRE-D	NA				
C0-10ARE-D	NA				
C0-11DD1E-D	C2-14D1				
C0-11DD2E-D	C2-14D2				
C0-11DRE-D	C2-14DR				
C0-11ARE-D	C2-14AR				
C0-12DD1E-D	C2-08D1-4VC	No *ZIP*Links are available for CLICK Ethernet Analog PLC units or CLICK PLUS Option Slot Modules with analog I/O.			
C0-12DD2E-D	C2-08D2-4VC				
C0-12DRE-D	C2-08DR-4VC				
C0-12ARE-D	C2-08AR-4VC				
C0-12DD1E-1-D	C2-08D1-6C				
C0-12DD2E-1-D	C2-08D2-6C				
C0-12DRE-1-D	C2-08DR-6C				
C0-12ARE-1-D	C2-08AR-6C				
C0-12DD1E-2-D	C2-08D1-6V				
C0-12DD2E-2-D	C2-08D2-6V				
C0-12DRE-2-D	C2-08DR-6V				
C0-12ARE-2-D	C2-08AR-6V				
NA	C2-DCM	No *ZIP*Links are available for CLICK PLUS Option Slot Communications Module			

Table Notes:

*** Select the cable length by replacing the * with: Blank = 0.5 m, -1 = 1.0 m, or -2 = 2.0 m.**

1 Note: The C0-04TRS relay output is derated not to exceed 2A per point maximum when used with the *ZIP*Link wiring system.

2 Note: Fuses (5x20 mm) are not included. See Edison Electronic Fuse section for 5x20 mm fuse. S500 and GMA electronic circuit protection is recommended for fast-acting maximum protection. S506 and GMC electronic circuit protection is recommended for time-delay performance. Ideal for inductive circuits. To ensure proper operation, do not exceed the voltage and current rating of the *ZIP*Link module. ZL-RFU20 = 2A per circuit.

CLICK/CLICK PLUS PLC Discrete Input Module *ZIP*Link Selector

I/O Module		ZIPLink		
Input Module	# of Terms	Component	Module Part No.	Cable Part No.
C0-08SIM	Not supported by *ZIP*Link			
C0-08ND3	11	Feedthrough	ZL-RTB20	ZL-C0-CBL11 *
C0-08ND3-1				
C0-08NE3				
C0-08NA				
C0-16ND3	20	Feedthrough	ZL-RTB20	ZL-C0-CBL20 *
		Sensor	ZL-LTB16-24-1	
C0-16NE3	20	Feedthrough	ZL-RTB20	
		Sensor	ZL-LTB16-24-1	

CLICK/CLICK PLUS PLC Discrete Output Module *ZIP*Link Selector

I/O Module		ZIPLink		
Output Module	# of Terms	Component	Module Part No.	Cable Part No.
C0-08TD1	11	Feedthrough	ZL-RTB20	ZL-C0-CBL11 *
C0-08TD2				
C0-08TR				
C0-08TR-3	Not supported by *ZIP*Link			
C0-08TA				
C0-16TD1	20	Feedthrough	ZL-RTB20	ZL-C0-CBL20*
		Fuse	ZL-RFU20 2	
		Relay (sinking)	ZL-RRL16-24-1	
C0-16TD2	20	Feedthrough	ZL-RTB20	ZL-C0-CBL20*
		Fuse	ZL-RFU20 2	
		Relay (sourcing)	ZL-RRL16-24-2	
C0-04TRS1	20	Feedthrough	ZL-RTB20	ZL-C0-CBL20*
C0-04TRS-10	Not supported by *ZIP*Link			

CLICK/CLICK PLUS PLC Combo I/O Module *ZIP*Link Selector

I/O Module		ZIPLink		
Combo Module	# of Terms	Component	Module Part No.	Cable Part No.
C0-16CDD1	20	Feedthrough	ZL-RTB20	ZL-C0-CBL20 *
C0-16CDD2				
C0-08CDR	11	Feedthrough	ZL-RTB20	ZL-C0-CBL11 *

CLICK/CLICK PLUS PLC Analog I/O Module *ZIP*Link Selector

I/O Module		ZIPLink		
Analog Module	# of Terms	Component	Module Part No.	Cable Part No.
C0-04AD-1	11	Feedthrough	ZL-RTB20	ZL-C0-CBL11 *
C0-04AD-2	11	Feedthrough	ZL-RTB20	ZL-C0-CBL11 *
C0-04RTD	20	No *ZIP*Links are available for RTD and thermocouple modules.		
C0-04THM	11			
C0-04DA-1	11	Feedthrough	ZL-RTB20	ZL-C0-CBL11 *
C0-04DA-2	11	Feedthrough	ZL-RTB20	ZL-C0-CBL11 *
C0-4AD2DA-1	20	Feedthrough	ZL-RTB20	ZL-C0-CBL20 *
C0-4AD2DA-2	20	Feedthrough	ZL-RTB20	ZL-C0-CBL20 *

Accessories

C2-USER-M ***$0.00***
CLICK PLUS PLC Hardware User Manual

Manual covers all CLICK PLUS PLC and I/O module installation and wiring, specifications, error codes and troubleshooting guide. The CLICK PLUS PLC Hardware User Manual can be downloaded free at the AutomationDirect Web site; www.AutomationDirect.com

C0-USER-M ***$0.00***
CLICK PLC Hardware User Manual

Manual covers all CLICK PLC and I/O module installation and wiring, specifications, error codes and troubleshooting guide. The CLICK PLC Hardware User Manual can be downloaded free at the AutomationDirect Web site; www.AutomationDirect.com

C0-PGMSW ***$12.00***
Programming Software USB

The programming software can be downloaded free at the AutomationDirect Web site, or the USB can be purchased from the AutomationDirect online Web store. www.AutomationDirect.com

EA-MG-PGM-CBL ***$52.00***
PC to Panel Programming Cable Assembly for C-more Micro-Graphic Panels and CLICK/CLICK PLUS PLCs

The 6-ft cable assembly connects a personal computer to any ***C-more*** Micro-Graphic panel, CLICK PLC, or select CLICK PLUS PLC for setup and programming.

Note: This cable assembly uses the PC's USB port and converts the signals to serial transmissions. The USB port supplies 5VDC to the Micro-Graphic panel for configuration operations.

Assembly includes standard USB A-type connector to B-type connector cable, custom converter, and an RS232C cable with an RJ12 modular connector on each end.

USB-CBL-AMICB6 ***$5.25***
USB A to USB microB Programming Cable Assembly (CLICK PLUS Only)

Programming cable, USB A to USB microB, 6ft (1.83 m) length. For use with CLICK PLUS PLCs and most USB devices. The USB port supplies 5VDC to the CLICK PLUS CPU for programming.

D2-DSCBL ***$35.00***
Programming Cable for CLICK/CLICK PLUS and DirectLOGIC PLCs

12ft. (3.66 m) RS232 shielded PC programming cable for CLICK, select CLICK PLUS PLCs, DL05, DL06, DL105, DL205, D3-350, D4-450, D4-454, and Do-more H2 and T1H series CPUs. 9-pin D-shell female connector to an RJ12 6P6C connector.

Note: If your PC has a USB port but does not have a serial port, you must use programming cable EA-MG-PGM-CBL to connect to CLICK PLCs. For CLICK PLUS PLCs, you may also use USB-CBL-AMICB6

C0-3TB ***$10.00***
Spare 3-Pole Terminal Block

Replacement 3-pole terminal block for the 3-wire RS-485 Port 3 on CLICK Standard and Analog PLCs as well as the CLICK PLUS C2-03CPU. Sold in packs of 2.

C0-4TB ***$10.00***
Spare 24VDC Power Terminal Block

Replacement terminal block for the 24VDC supply power to the PLC. Sold in packs of 2.

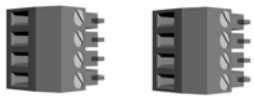

C0-8TB ***$16.50***
Spare 8-Point I/O Terminal Block

Replacement terminal block for the 8-point I/O modules. Sold in packs of 2.

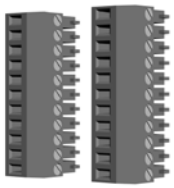

C0-8TB-1 ***$19.50***
Spare 13-Point I/O Terminal Block

Replacement terminal block for the 8-point I/O relay modules. Sold in packs of 2.

C0-16TB ***$23.00***
Spare 16-Point I/O Terminal Block

Replacement terminal block for the 16-point I/O modules and PLC built-in I/O. Sold in packs of 2.

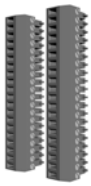

C2-6TB ***$16.50***
Spare 6-pt Terminal Block

Replacement terminal block for the C2-DCM serial ports.
Sold in packs of 2.

Accessories

SE-ANT250 ***$37.00***
Wi-Fi/Bluetooth Dome Antenna

2.4 GHz antenna, IP67, panel mount, 9.8 ft (3m) cable length, for external mounting when CLICK PLUS PLC is installed in a metallic enclosure.

C2-FILL ***$8.50***
CPU Option Slot Cover

Snap-on cover for CLICK PLUS CPU Option Slot in applications without an Option Slot module present.

MSD-SLC16G ***$100.00***
16GB microSD card, industrial grade, 3D NAND Flash (with SLC Mode), 85°C [185°F] max operating temp.

SE-ANT210 ***$10.50***
Wi-Fi/Bluetooth Whip Antenna

Whip/straight 2.4 GHz antenna, IP65, connector mount. Not recommended for installation in a metallic enclosure.

D2-BAT-1 ***$6.50***
Replacement CR2354 battery for Standard, Analog, Ethernet Standard and Ethernet Analog PLC units.

TW-SD-MSL-2 ***$3.75***
Insulated Slotted Screwdriver
0.4 x 2.5 x 80 mm slotted screwdriver for terminal blocks.

DN-EB35MN ***$31.50***
DIN*nector* ***End Bracket***

D0-MC-BAT ***$3.00***
Replacement CR2032 battery for CLICK PLUS PLC units.

DN-WS ***$63.00***
Wire Stripper

C-more and C-more Micro Graphic Operator Interfaces

ZIPLink Wiring Systems