Relay Output Modules

F3-08TRS-5 Relay Output (Class 1, Div 2)	
Outputs per Module	8
Commons per Module	8 (isolated)
Operating Voltage*	12-250VAC 12-30VDC
Output Type	6 Form A (SPST), 2 Form C (SPDT)
Peak Voltage	265VAC/120VDC
AC Frequency	47-63Hz
ON Voltage Drop	N/A
Max Current (Resistive)	3A/point AC/DC, 24A/module AC/DC
Max Leakage Current	N/A

*Maximum DC voltage rating is 120VDC at .5 Amp, 30,000 cycles typical.

Motor starters up to and including NEMA size 3 can be used with this module.

Max Inrush Current	10A inductive
Minimum Load	100mA @ 12VDC
Base Power Required	9V 37mA/ON pt. (296 mA Max), 24V N/A
OFF to ON Response	13ms max
ON to OFF Response	9ms max
Terminal Type	Removable
Status Indicators	Logic side
Weight	9oz. (255 g)
Fuses	8 fuses (10A, 125V), replaceable Order D3-FUSE-6 (5 per pack) or use 19379-K-10A Wickman

Obsolete module
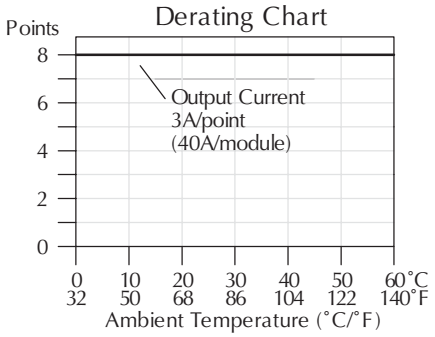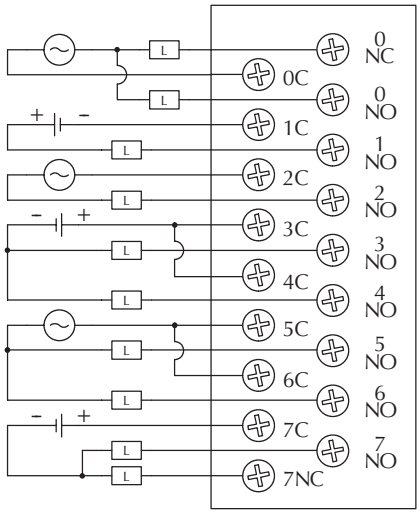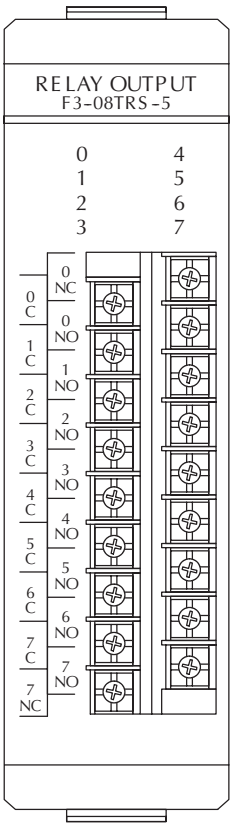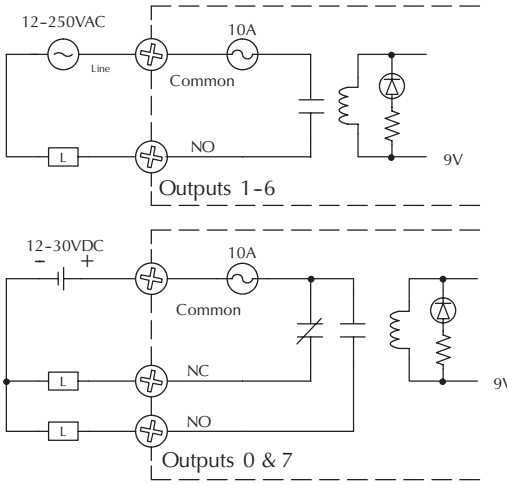
Typical Relay Life			
Max. Resistive or Inductive Inrush Load Current	Operating Voltage		
	28VDC	120VAC	240VAC
5.0A	200K	100K	
3.0A	325K	125K	50K
05A	>50M