ProSense® SPTD25 Series Pressure Transmitters

Part No. SPTD25-20-0100H

The ProSense SPTD25 pressure transmitter series is engineered to meet many industrial, commercial, and OEM pressure measurement applications. The all-stainless steel thin film sensing element provides very fast response time and can be used to sense any compatible media. With a robust design resistant to vibration, shock, and EMI/RFI, the SPTD25 series provides high accuracy over a wide compensated temperature range. Pressure sensing ranges from 100 to 5000 psig are available with a ¼ inch NPT male threaded process connection and a linear 4-20 mA output with an M12 quick-disconnect electrical connection.

Applications

- Process control & automation
- Pump & compressor control
- Hydraulic systems
- Pneumatic systems
- Engine monitoring
- Presses
- Machine tools

Features

- All-stainless steel sensing element
- Fast response time
- Pressure ranges from 100 to 5000 psig
- 1/4 inch NPT male threaded process connection
- 4-20 mA output
- M12 quick-disconnect electrical connection
- UL508 listed, CE marked
- 3-year warranty

Note: Check the chemical compatibility of the sensor's wetted parts with the medium to be measured.

ProSense SPTD25 Series Pressure Transmitters

Part Number	Description	Pcs/Pkg	Wt (lb)	Price
SPTD25-20-0100H	Pressure transmitter, 4 to 20 mA output, 0 to 100 psig range, 1/4" NPT male port, M12 connector	1	0.1	$119.00
SPTD25-20-0200H	Pressure transmitter, 4 to 20 mA output, 0 to 200 psig range, 1/4" NPT male port, M12 connector	1	0.1	$119.00
SPTD25-20-0300H	Pressure transmitter, 4 to 20 mA output, 0 to 300 psig range, 1/4" NPT male port, M12 connector	1	0.1	$119.00
SPTD25-20-0500H	Pressure transmitter, 4 to 20 mA output, 0 to 500 psig range, 1/4" NPT male port, M12 connector	1	0.1	$119.00
SPTD25-20-1000H	Pressure transmitter, 4 to 20 mA output, 0 to 1000 psig range, 1/4" NPT male port, M12 connector	1	0.1	$119.00
SPTD25-20-3000H	Pressure transmitter, 4 to 20 mA output, 0 to 3000 psig range, 1/4" NPT male port, M12 connector	1	0.1	$119.00
SPTD25-20-5000H	Pressure transmitter, 4 to 20 mA output, 0 to 5000 psig range, 1/4" NPT male port, M12 connector	1	0.1	$119.00

ProSense SPTD25 Series General Specifications

Housing Material	Stainless steel 316L (DIN 1.4404); Stainless steel 17-4PH (DIN 1.4542); Polyamide (PA)
Materials (wetted parts)*	Stainless steel 17-4PH (DIN 1.4542)
Operating Temperature	–40 to 194°F (–40 to 90°C)
Medium Temperature	–40 to 194°F (–40 to 90°C)
Storage Temperature	–40 to 212°F (–40 to 100°C)
Protection	IP 67 / IP 69K
Accuracy[1]	< ± 0.5% of full range
Linearity[2]	< ± 0.1% (BFSL) / < ± 0.2% (LS)
Hysteresis	< ± 0.2%
Repeatability[3]	< ± 0.05%
Long-Term Stability[4]	< ± 0.1%

** Not cleaned for oxygen service*
[1] Zero point and span error, non-linearity, hysteresis
[2] BFSL = Best fit straight line / LS = limit value setting
[3] With temperature fluctuations <10°C
4 In % of the span / 6 months

ProSense® SPTD25 Series Pressure Transmitters

ProSense SPTD25 Series General Specifications Continued	
Operating Voltage	8.5 to 36 VDC*
Analog Output	4 to 20 mA
Maximum Load	[(supply voltage - 8.5) / 21.5 mA]Ω | For example: [(24VDC - 8.5) / 0.0215] = 720Ω
IEC Protection Class	Class III
Step Response Time Analog Output	1 ms
Short-Circuit Proof	yes
Overload Protection	yes
Reverse Polarity Protection	yes
Insulation Resistance	> 100 MΩ: (500 VDC)
Shock Resistance	50g (DIN 60068-2-27, 11ms)
Vibration Resistance	20g (DIN 60068-2-6, 10 - 2000 Hz)
EN 61000-4-2 ESD	4 kV / 8 kV AD
EN 61000-4-3 HF Radiated	30 V/m
EN 61000-4-4 Burst	2kV
EN 61000-4-6 HF Conducted	10V
EC Pressure Equipment Directive 97/23/EC	Article 3, section 3: Group 2 Non-Hazardous, Non-flammable, Non-oxidizing
EMC	DIN EN 61000-6-2; DIN EN 61000-6-3
MTTF (Years)	784
Min. Pressure Cycles	60 million lifetime (at 1.2 times the nominal pressure)
Agency Approvals	cULus (E320431), CE, RoHS
**** per EN50178, SELV, PELV***	

Warning! Avoid static and dynamic overpressure exceeding the given overload pressure.
Exceeding the bursting pressure for even a short time can cause destruction of the unit and possible injuries!

Dimensions

mm [inches]

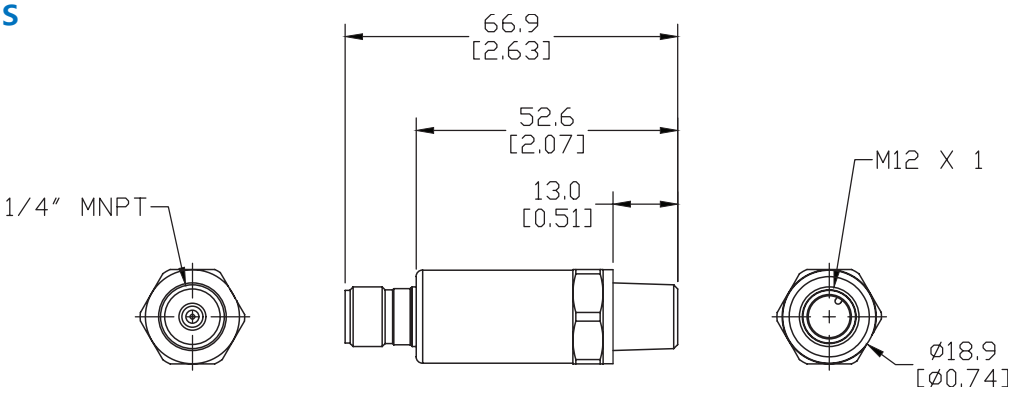

See our website www.AutomationDirect.com for complete Engineering drawings.

prosense® SPTD25 Series Pressure Transmitters

Pressure Ratings

Applications (Type of Pressure: Gauge Pressure, Liquids and Gases)			
Part Number	*Final Value of the Measuring Range*	*Static Proof Pressure Resistance (Max. Permissible Pressure)*	*Bursting Pressure*
	Psig	*Psig*	*Psig*
SPTD25-20-0100H	100	250	2900
SPTD25-20-0200H	200	580	6525
SPTD25-20-0300H	300	940	8700
SPTD25-20-0500H	500	1450	11600
SPTD25-20-1000H	1000	2500	13050
SPTD25-20-3000H	3000	7250	14500
SPTD25-20-5000H	5000	14500	24650

All SPTD25 series transmitters can withstand vacuum down to -14.5 psig

Warning! Avoid static and dynamic overpressure exceeding the given overload pressure.
Exceeding the bursting pressure for even a short time can cause destruction of the unit and possible injuries!

Current Output 4-20 mA

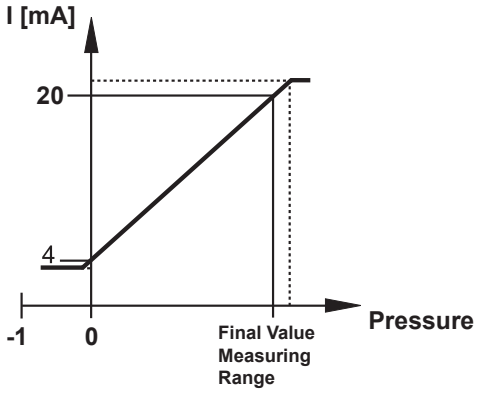

In the measuring range the output signal is between 4 and 20mA. If the system pressure is above or below the measuring range, the analog output performs as follows:

- System pressure above the measuring range: 20...25mA non-linear
- System pressure below the measuring range: 4...3mA non-linear

SPTD25-20 Wiring Diagrams

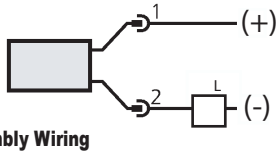

Cable Assembly Wiring Colors:
Pin 1 - Brown +
Pin 2 - White - Out
Pin 3 - Blue, not used
Pin 4 - Black, not used

See Proximity Sensor section for cable specs

Note: Wiring colors are based on AutomationDirect CD12L and CD12M 4-pole cable assemblies.