M Series Magnetic Proximity Sensors

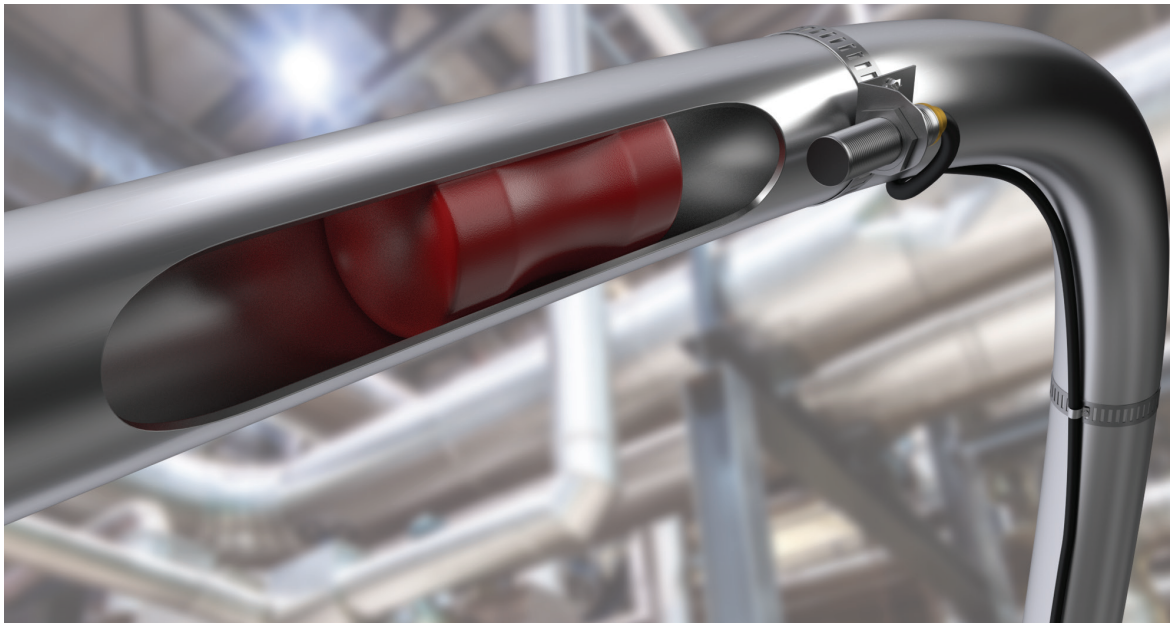

Overview

Magnetic proximity sensors are used for non-contact position detection beyond the normal limits of inductive sensors. In conjunction with a separate "damping" magnet, magnetic sensors offer very long sensing ranges from a small package size. Depending on the orientation of the magnetic field the sensor can be damped from the front or from the side.

Since magnetic fields penetrate all non-magnetisable materials, these sensors can detect magnets through walls made of non-ferrous metal, stainless steel, aluminium, plastic or wood.

In the food industry the magnetic sensor is often used in connection with a "pig" (cleaning devices which pass through the inside of pipes). These magnetic proximity sensors can detect the exact position of the pig from outside the wall of the stainless steel pipe.

Many clean in place (CIP) systems use magnetic proxes at a "diverter panel" to detect the position of a U-tube through a stainless steel faceplate.

Features:

- Detection through plastic, wood, and any non-magnetisable metals
- Small housings with very long sensing ranges up to 70 mm
- Cylinder and rectangular designs satisfy space-dependent applications
- High mechanical stability in case of shock or vibration
- Flush or non-flush installation in non-magnetisable metals

Operating Principle

Magnetic sensors use GMR (Giant Magneto Resistive Effect) technology. The measuring cell consists of resistors with several extremely fine, ferromagnetic and non-magnetic layers. Two of these GMR resistors are used to form a conventional Wheatstone bridge circuit which produces a large signal proportional to the magnetic field when a magnetic field is present. A threshold value is defined and an output signal is switched via a comparator.

M Series Cylindrical Magnetic Proximity Sensors

8mm, 12mm and 18mm stainless steel

- 8mm, 12mm, and 18mm diameter
- 316L stainless steel housing
- 316L stainless steel or PBT (polybutylene terephthalate) sensing face
- Complete overload protection
- IP67, IP65/IP67 or IP65/IP68/IP69K rated
- 2m axial cable or quick-disconnect termination styles
- Mounting hex nuts included
- Lifetime warranty

MAFM1-AP-1H

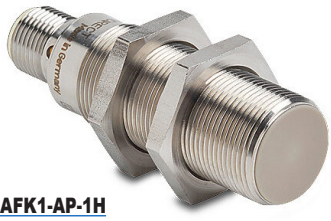

MAFK1-AP-1H

M Series Magnetic DC Proximity Selection Chart								
Part Number	***Price***	***Sensing Range***	***Mounting***	***Output State***	***Logic***	***Connection***	***Wiring***	***Dimensions***
8mm Diameter								
MAE-AP-1F	$59.00	0 to 60 mm [0 to 2.362 in]	Flush	N.O.	PNP	M8 connector	Diagram 3	Figure 1
MAE-AP-1A	$59.00					2m [6.5 ft] cable	Diagram 1	Figure 2
12mm Diameter								
MAFM1-AP-1H	$45.00	0 to 60 mm [0 to 2.362 in]	Flush	N.O.	PNP	M12 connector	Diagram 3	Figure 3
MMW-AP-1H	$61.00						Diagram 3	
MMW-AN-1H	$61.00				NPN		Diagram 2	
MMW-CP-1H	$61.00			N.C.	PNP		Diagram 4	
18mm Diameter								
MAFK1-AP-1H	$50.00	0 to 70 mm [0 to 2.756 in]	Flush	N.O.	PNP	M12 connector	Diagram 3	Figure 4
MKW-AP-1H	$64.00						Diagram 3	
MKW-AN-1H	$64.00				NPN		Diagram 2	
MKW-CP-1H	$64.00			N.C.	PNP		Diagram 4	

Wiring Diagrams

Diagram 1

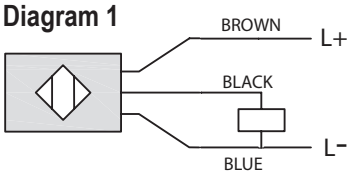

Diagram 2

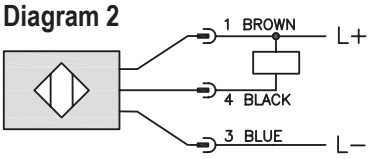

Diagram 3

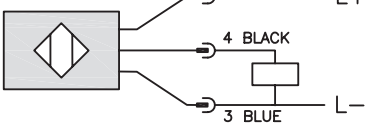

Diagram 4

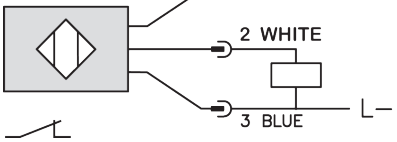

Connectors

M8 connector

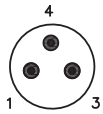

M12 connector

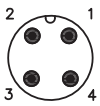

Note: Class 2 power supply required

M Series Cylindrical Magnetic Proximity Sensors

M Series Magnetic DC Proximity Specifications					
Series	***MAE***	***MAFM***	***MMW***	***MAFK***	***MKW***
Mounting Type	Flush				
Nominal Sensing Distance*	0 to 60 mm [0 to 2.362 in]			0 to 70 mm [0 to 2.756 in]	
Operating Distance	NA				
Material Correction Factors	NA				
Output Type	PNP, N.O. only	PNP, N.O. only	PNP/NPN N.O., N.C.	PNP, N.O. only	PNP/NPN N.O., N.C.
Operating Voltage	10 to 30 VDC				
No-load Supply Current	< 10mA				
Operating (Load) Current	200mA				
Off-state (Leakage) Current	NA				
Voltage Drop	< 2.5 V				
Switching Frequency	5000 Hz VDC				
Differential Travel (% of Nominal Distance)	1 to 10%				
Repeat Accuracy	10%				
Ripple	NA				
Time Delay Before Availability (tv)	10s				
Reverse Polarity Protection	Yes				
Short-Circuit Protection	Yes (non latching)				
Operating Temperature	-25 to 75°C [-13 to 167°F]	0 to 100°C [32 to 212°F]	-25 to 75°C [-13 to 167°F]	0 to 100°C [32 to 212°F]	-25 to 75°C [-13 to 167°F]
Protection Degree (DIN 40050)	IEC IP67 III	IEC IP65/IP68/IP69K, III	IEC IP65/IP67 III	IEC IP65/IP68/IP69K, III	IEC IP65/IP67 III
Indication/Switch Status	Normally open output energized - Yellow				
Housing Material	316L stainless steel				
Sensing Face Material	PBT (Polybutylene Terephthalate)	Stainless steel 316L			
Shock/Vibration	See Proximity Sensor Terminology				
Tightening Torque	3.5 N•m [2.58 lb-ft]	20 N•m [14.75 lb-ft]	10 N•m [7.38 lb-ft]	50 N•m [37 lb-ft]	35 N•m [25.81 lb-ft]
Weight	69g [2.4 oz] cable 27g [0.95 oz] connector	28g [0.98 oz]	29g [1.02 oz]	49g [1.73 oz]	49g [1.73 oz]
Connection	M8 connector or 2m [6.5 ft] cable	M12 connector			
Agency Approvals	cULus E32881, CE				

Note: To obtain the most current agency approval information, see the Agency Compliance & Certifications Checklist section on the specific part number's web page.
***Sensing distances are based on MAG-4 magnet.**
Note: Purchase magnets separately (see listing for compatible magnets later in this section).

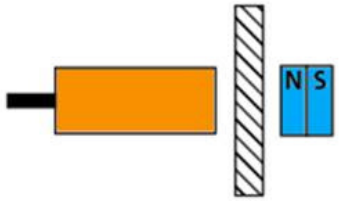

Sensing distances are based on the MAG-4 magnet with North facing the sensor. The sensor will work fine with South facing also, but ranges vary.

M Series Cylindrical Magnetic Proximity Sensors

Dimensions

mm [inches]

Figure 1

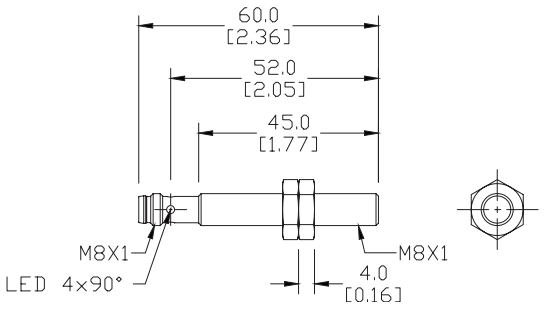

Figure 2

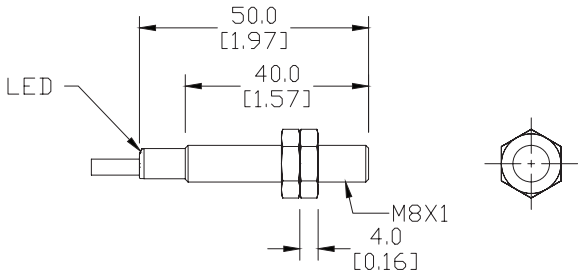

Figure 3

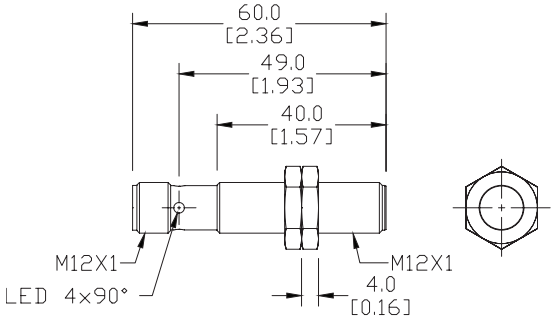

Figure 4

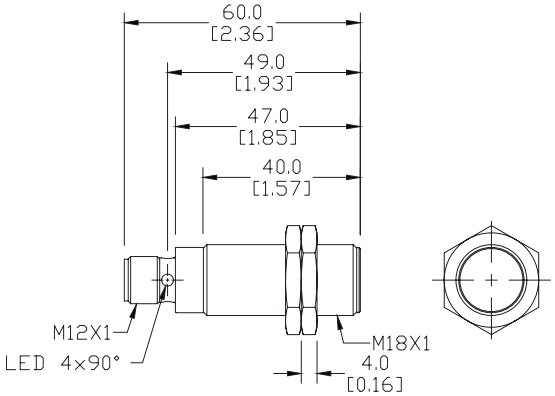

See our website: www.AutomationDirect.com for complete Engineering drawings.

M Series Rectangular Magnetic Proximity Sensors

Rectangular DC

- Rectangular units
- Polybutylene terephthalate housing
- M8 quick-disconnect or 2m cable
- Complete overload protection
- Lifetime warranty

M Series Magnetic DC Proximity Selection Chart

Part Number	Price	Sensing Range	Mounting	Output State	Logic	Connection	Wiring	Dimensions
MDR-AP-1F	$49.00	0 to 60 mm [0 to 2.362 in]	Flush	N.O.	PNP	M8 connector	Diagram 4	Figure 1
MDR-AP-1A	$49.00	0 to 60 mm [0 to 2.362 in]	Flush			2m [6.5 ft] cable	Diagram 2	Figure 2

Wiring Diagrams

Diagram 1

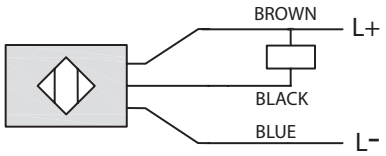

Diagram 2

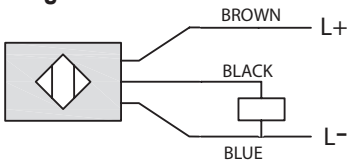

Connectors

M8 connector

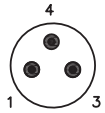

Diagram 3

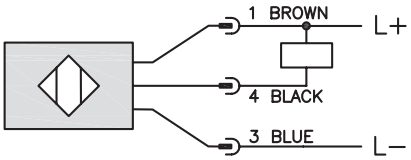

Diagram 4

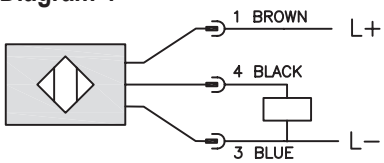

Note: Class 2 power supply required

Dimensions

mm [inches]

Figure 1

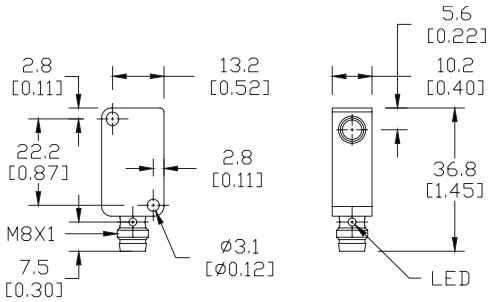

Figure 2

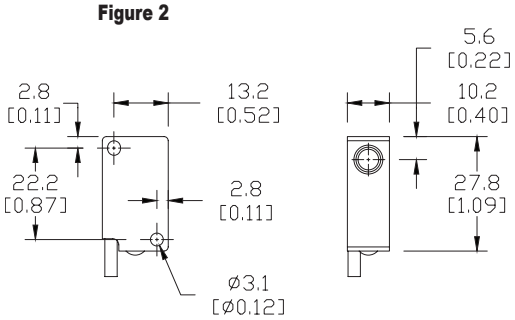

See our website: www.AutomationDirect.com for complete Engineering drawings.

M Series Rectangular Magnetic Proximity Sensors

M Series Magnetic DC Proximity Specifications	
Series	***MDR***
Mounting Type	Flush
Nominal Sensing Distance*	0 to 60mm [0 to 2.362 in]
Operating Distance	NA
Material Correction Factors	NA
Output Type	PNP, N.O. only
Operating Voltage	10 to 30VDC
No-load Supply Current	< 10mA
Operating (Load) Current	200mA
Off-state (Leakage) Current	NA
Voltage Drop	< 2.5 V
Switching Frequency	5000Hz VDC
Differential Travel (% of Nominal Distance)	1 to 10%
Repeat Accuracy	10%
Ripple	NA
Time Delay Before Availability (tv)	1s
Reverse Polarity Protection	yes
Short-Circuit Protection	yes (non latching)
Operating Temperature	-25 to 75°C [-13 to 167°F]
Protection Degree (DIN 40050)	IEC IP67
Indication/Switch Status	Yellow (Output energized)
Housing Material	PBT (Polybutylene terephthalate)
Sensing Face Material	PBT (Polybutylene terephthalate)
Shock/Vibration	See Proximity Sensor Terminology
Tightening Torque	NA
Weight	Cable: 60g [2.12 oz]; M8: 17g [0.6 oz]
Connection	M8 connector or 2m [6.5 ft] cable
Agency Approvals	cULus E32881, CE

Note: To obtain the most current agency approval information, see the Agency Approval Checklist section on the specific part number's web page.
***Sensing distances are based on MAG-4 magnet.**
Note: Purchase magnets separately (see listing for compatible magnets later in this section).

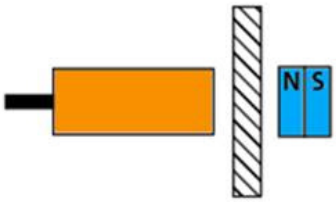

Sensing distances are based on the MAG-4 magnet with North facing the sensor. The sensor will work fine with South facing also, but ranges vary.