# IronHorse® Cast-Iron Worm Gearboxes

## Cast-Iron Model Overview

**IronHorse Cast-Iron Right-Hand Shaft Worm Gearbox**

**IronHorse Cast-Iron Left-Hand Shaft Worm Gearbox**

**IronHorse Cast-Iron Dual Shaft Worm Gearbox**

**IronHorse Cast-Iron Hollow Bore Worm Gearbox**

## Gearbox Overview

Gearboxes, also known as enclosed gear drives or speed reducers, are mechanical drive components that can control a load at a reduced fixed ratio of the motor speed. The output torque is also increased by the same ratio, while the horsepower remains the same (less efficiency losses.) For example, a 10:1 ratio gearbox outputs approximately the same motor output horsepower, motor speed divided by 10, and motor torque multiplied by 10.

Worm gearboxes contain a worm (gear type) on the input shaft, and a mating gear on the output shaft. Worm gearboxes also change the drive direction by 90°.

IronHorse worm gearboxes are manufactured in an ISO9001 certified plant by one of the leading gearbox manufacturers in the world today. Only the highest quality materials are tested, certified, and used in the manufacturing process. Strict adherence to and compliance with the toughest international and U.S. testing standards and manufacturing procedures assure you the highest quality products.

As seen above, our cast-iron gearboxes are offered with right-hand, left-hand and dual (both right and left) output shafts, and with hollow-bore outputs (all the way through from one side to the other). We also offer optional gearbox mounting bases for ease of installation.

## Features

- C flange input; dual shaft, right-hand shaft, left-hand shaft or hollow-bore output
- Cast iron one-piece housing
- 1045 carbon steel shaft
- AlBC3 (aluminum bronze casting) main gear; much harder than the typical phosphor bronze
- Shaft sleeves protect all shafts
- One-piece output shaft hub secures output shaft bearing
- Double bearing sets on both shaft ends
- Heavy duty bearings on the output shaft
- Interior channel guides oil to directly and constantly lube bearings
- All units filled with Mobil synthetic oil*
- Double-lipped embedded oil seals to prevent leakage
- Special anti-rust primer inside and outside the gearbox
- Special black natural dry paint
- Universally interchangeable compact design ensures easy OEM replacement
- Multiple mounting orientation options (see user manual for allowed mounting orientations)
- Radiused mounting holes
- Optional mounting plates available
- One year warranty

## Applications

- Use with electric motors for reducing output speed, increasing torque, changing drive direction, or running two loads from one motor.
- Use for conveyors, packaging machines, rotary tables, etc.

**NOTE:** Units manufactured with first 4 serial numbers up to 2108 filled with Mobil SHC634 synthetic oil. Units manufactured with first 4 serial numbers from 2109 are filled with SHC632 synthetic oil.

# IronHorse® Cast-Iron Worm Gearboxes

## Specifications

**IronHorse Cast-Iron Worm Gearbox Specifications**

| Part Number * | Price | Nominal Ratio | Actual Ratio | Output RPM @ 1750 RPM Input | Nominal Motor HP [1] @ 1800 RPM | NEMA Motor Frame | Output Type [2] | Center Distance [3] (in) | Overhung Load [4] (lb) | Thrust Load [5] (lb) | Efficiency (%) | Approx Weight (lb) | Maximum Ratings @ 1750 RPM Input * | | | | | | Maximum Backlash (arc-minute) |
|---|---|---|---|---|---|---|---|---|---|---|---|---|---|---|---|---|---|---|---|
| | | | | | | | | | | | | | Mechanical [6] | | | Thermal [7] | | | |
| | | | | | | | | | | | | | Input Power (hp) | Output Power (hp) | Output Torque (lb-in) | Input Power (hp) | Output Power (hp) | Output Torque (lb-in) | |
| WG-175-005-D | $199.00 | 5:1 | 5.25:1 | 350 | 1.5 | 56C | D | 1.75 | 650 | 550 | 93 | 23 | 2.83 | 2.62 | 499 | 2.28 | 2.11 | 402 | 20 |
| WG-175-005-H | $245.00 | | | | | 56C | H | | | | | 23 | | | | | | | |
| WG-175-005-R | $199.00 | | | | | 56C | L | | | | | 22 | | | | | | | |
| WG-175-005-L | $198.00 | | | | | 56C | R | | | | | 22 | | | | | | | |
| WG-175-010-D | $199.00 | 10:1 | 10.33:1 | 175 | 1 | 56C | D | | | | 88 | 23 | 1.57 | 1.38 | 515 | 1.36 | 1.19 | 445 | |
| WG-175-010-H | $245.00 | | | | | 56C | H | | | | | 23 | | | | | | | |
| WG-175-010-R | $199.00 | | | | | 56C | L | | | | | 22 | | | | | | | |
| WG-175-010-L | $198.00 | | | | | 56C | R | | | | | 22 | | | | | | | |
| WG-175-015-D | $199.00 | 15:1 | 14.5:1 | 117 | 0.75 | 56C | D | | | | 85 | 23 | 1.24 | 1.06 | 554 | 1.13 | 0.96 | 506 | |
| WG-175-015-H | $245.00 | | | | | 56C | H | | | | | 23 | | | | | | | |
| WG-175-015-R | $199.00 | | | | | 56C | L | | | | | 22 | | | | | | | |
| WG-175-015-L | $198.00 | | | | | 56C | R | | | | | 22 | | | | | | | |
| WG-175-020-D | $199.00 | 20:1 | 19.5:1 | 88 | 0.75 | 56C | D | | | | 83 | 23 | 1.02 | 0.85 | 596 | 0.98 | 0.81 | 572 | |
| WG-175-020-H | $245.00 | | | | | 56C | H | | | | | 23 | | | | | | | |
| WG-175-020-R | $199.00 | | | | | 56C | L | | | | | 22 | | | | | | | |
| WG-175-020-L | $198.00 | | | | | 56C | R | | | | | 22 | | | | | | | |
| WG-175-040-D | $199.00 | 40:1 | 40:1 | 44 | 0.33 | 56C | D | | | | 62 | 23 | 0.74 | 0.49 | 714 | 0.59 | 0.39 | 558 | |
| WG-175-040-H | $260.00 | | | | | 56C | H | | | | | 23 | | | | | | | |
| WG-175-040-R | $199.00 | | | | | 56C | L | | | | | 22 | | | | | | | |
| WG-175-040-L | $198.00 | | | | | 56C | R | | | | | 22 | | | | | | | |
| WG-175-060-D | $199.00 | 60:1 | 60:1 | 29 | 0.25 | 56C | D | | | | 52 | 23 | 0.38 | 0.20 | 469 | 0.38 | 0.2 | 469 | |
| WG-175-060-H | $260.00 | | | | | 56C | H | | | | | 23 | | | | | | | |
| WG-175-060-R | $199.00 | | | | | 56C | L | | | | | 22 | | | | | | | |
| WG-175-060-L | $198.00 | | | | | 56C | R | | | | | 22 | | | | | | | |

1) Nominal Motor HP is the highest hp 1800 rpm motor to be used with the gearbox under conditions of 1.0 service factor. Gearbox input power capacity decreases as motor speed decreases and as service factor increases.
2) Output Type: D = Dual Shaft; H = Hollow Bore; R = Right-Hand Shaft; L = Left-Hand Shaft
3) The Center Distance is the distance between the centerlines of the input and output shafts.
4) Overhung Load ratings are for forces perpendicular to the output shaft and located at the shaft midpoint, such as from a gear, pulley, or sprocket with a belt or chain. Divide OHL ratings by the applicable OHL K factors shown separately in the Selection Factors tables. OHL ratings should also be divided by applicable service factors.
5) Thrust Load ratings are for forces along the axis of the output shaft, usually encountered in vertical-drive applications from agitators, mixers, fans, blowers, etc.
6) Maximum Mechanical Ratings are limits based on strength and durability of gearbox components; applicable when operating time is short and stopped time is greater than or equal to operating time. These ratings are applicable for 1.0 service factor loads, and may require modification depending upon characteristics of the applicable driven loads. Refer to the "Service Factors" table for more information.
7) Maximum Thermal Ratings are limits for gearbox continuous use without overheating.
* Maximum Input Speed is 2500 rpm.

# IronHorse® Cast-Iron Worm Gearboxes

## Specifications (continued)

### IronHorse Cast-Iron Worm Gearbox Specifications

| Part Number * | Price | Nominal Ratio | Actual Ratio | Output RPM @ 1750 RPM Input | Nominal Motor HP [1] @ 1800 RPM | NEMA Motor Frame | Output Type [2] | Center Distance [3] (in) | Overhung Load [4] (lb) | Thrust Load [5] (lb) | Efficiency (%) | Approx Weight (lb) | Maximum Ratings @ 1750 RPM Input * | | | | | | Maximum Backlash (arc-minute) |
|---|---|---|---|---|---|---|---|---|---|---|---|---|---|---|---|---|---|---|---|
| | | | | | | | | | | | | | Mechanical [6] | | | Thermal [7] | | | |
| | | | | | | | | | | | | | Input Power (hp) | Output Power (hp) | Output Torque (lb-in) | Input Power (hp) | Output Power (hp) | Output Torque (lb-in) | |
| WG-206-005-D | $252.00 | 5:1 | 5.75:1 | 350 | 2 | 56C | D | 2.06 | 700 | 750 | 92 | 28 | 3.62 | 3.33 | 685 | 2.57 | 2.36 | 486 | 17 |
| WG-206-005-H | $314.00 | | | | | 56C | H | | | | | 28 | | | | | | | |
| WG-206-005-R | $252.00 | | | | | 56C | L | | | | | 27 | | | | | | | |
| WG-206-005-L | $250.00 | | | | | 56C | R | | | | | 27 | | | | | | | |
| WG-206-010-D | $252.00 | 10:1 | 10.33:1 | 175 | 1.5 | 56C | D | | | | 90 | 28 | 2.77 | 2.50 | 935 | 2.10 | 1.89 | 708 | |
| WG-206-010-H | $314.00 | | | | | 56C | H | | | | | 28 | | | | | | | |
| WG-206-010-R | $252.00 | | | | | 56C | L | | | | | 27 | | | | | | | |
| WG-206-010-L | $250.00 | | | | | 56C | R | | | | | 27 | | | | | | | |
| WG-206-015-D | $252.00 | 15:1 | 15.5:1 | 117 | 1 | 56C | D | | | | 85 | 28 | 2.09 | 1.78 | 1002 | 1.40 | 1.20 | 673 | |
| WG-206-015-H | $314.00 | | | | | 56C | H | | | | | 28 | | | | | | | |
| WG-206-015-R | $252.00 | | | | | 56C | L | | | | | 27 | | | | | | | |
| WG-206-015-L | $250.00 | | | | | 56C | R | | | | | 27 | | | | | | | |
| WG-206-020-D | $238.00 | 20:1 | 19.5:1 | 88 | 1 | 56C | D | | | | 82 | 28 | 1.57 | 1.29 | 914 | 1.17 | 0.96 | 681 | |
| WG-206-020-H | $314.00 | | | | | 56C | H | | | | | 28 | | | | | | | |
| WG-206-020-R | $252.00 | | | | | 56C | L | | | | | 27 | | | | | | | |
| WG-206-020-L | $252.00 | | | | | 56C | R | | | | | 27 | | | | | | | |
| WG-206-040-D | $240.00 | 40:1 | 40:1 | 44 | 0.5 | 56C | D | 2.06 | 700 | 750 | 71 | 28 | 1.09 | 0.77 | 1120 | 0.71 | 0.50 | 726 | 17 |
| WG-206-040-H | $314.00 | | | | | 56C | H | | | | | 28 | | | | | | | |
| WG-206-040-R | $252.00 | | | | | 56C | L | | | | | 27 | | | | | | | |
| WG-206-040-L | $252.00 | | | | | 56C | R | | | | | 27 | | | | | | | |
| WG-206-060-D | $238.00 | 60:1 | 60:1 | 29 | 0.33 | 56C | D | 2.06 | 700 | 750 | 58 | 28 | 0.60 | 0.35 | 750 | 0.48 | 0.28 | 606 | |
| WG-206-060-H | $314.00 | | | | | 56C | H | | | | | 28 | | | | | | | |
| WG-206-060-R | $252.00 | | | | | 56C | L | | | | | 27 | | | | | | | |
| WG-206-060-L | $252.00 | | | | | 56C | R | | | | | 27 | | | | | | | |

1) Nominal Motor HP is the highest hp 1800 rpm motor to be used with the gearbox under conditions of 1.0 service factor. Gearbox input power capacity decreases as motor speed decreases and as service factor increases.
2) Output Type: D = Dual Shaft; H = Hollow Bore; R = Right-Hand Shaft; L = Left-Hand Shaft
3) The Center Distance is the distance between the centerlines of the input and output shafts.
4) Overhung Load ratings are for forces perpendicular to the output shaft and located at the shaft midpoint, such as from a gear, pulley, or sprocket with a belt or chain. Divide OHL ratings by the applicable OHL K factors shown separately in the Selection Factors tables. OHL ratings should also be divided by applicable service factors.
5) Thrust Load ratings are for forces along the axis of the output shaft, usually encountered in vertical-drive applications from agitators, mixers, fans, blowers, etc.
6) Maximum Mechanical Ratings are limits based on strength and durability of gearbox components; applicable when operating time is short and stopped time is greater than or equal to operating time. These ratings are applicable for 1.0 service factor loads, and may require modification depending upon characteristics of the applicable driven loads. Refer to the "Service Factors" table for more information.
7) Maximum Thermal Ratings are limits for gearbox continuous use without overheating.
* Maximum Input Speed is 2500 rpm.

# IronHorse® Cast-Iron Worm Gearboxes

## Specifications (continued)

### IronHorse Cast-Iron Worm Gearbox Specifications

| Part Number * | Price | Nominal Ratio | Actual Ratio | Output RPM @ 1750 RPM Input | Nominal Motor HP [1] @ 1800 RPM | NEMA Motor Frame | Output Type [2] | Center Distance [3] (in) | Overhung Load [4] (lb) | Thrust Load [5] (lb) | Efficiency (%) | Approx Weight (lb) | Maximum Ratings @ 1750 RPM Input * | | | | | | Maximum Backlash (arc-minute) |
|---|---|---|---|---|---|---|---|---|---|---|---|---|---|---|---|---|---|---|---|
| | | | | | | | | | | | | | Mechanical [6] | | | Thermal [7] | | | |
| | | | | | | | | | | | | | Input Power (hp) | Output Power (hp) | Output Torque (lb-in) | Input Power (hp) | Output Power (hp) | Output Torque (lb-in) | |
| WG-237-005-D | $286.00 | 5:1 | 5.25:1 | 350 | 3 | 56C | D | 2.37 | 900 | 900 | 93 | 38 | 4.57 | 4.24 | 798 | 3.56 | 3.31 | 630 | 17 |
| WG-237-005-H | $359.00 | | | | | 56C | H | | | | | 36 | | | | | | | |
| WG-237-005-R | $303.00 | | | | | 56C | L | | | | | 37 | | | | | | | |
| WG-237-005-L | $303.00 | | | | | 56C | R | | | | | 37 | | | | | | | |
| WG-237-010-D | $286.00 | 10:1 | 10.33:1 | 175 | 1.5 | 56C | D | 2.37 | 900 | 900 | 89 | 38 | 3.47 | 3.09 | 1158 | 2.24 | 1.99 | 746 | |
| WG-237-010-H | $359.00 | | | | | 56C | H | | | | | 36 | | | | | | | |
| WG-237-010-R | $303.00 | | | | | 56C | L | | | | | 37 | | | | | | | |
| WG-237-010-L | $300.00 | | | | | 56C | R | | | | | 37 | | | | | | | |
| WG-237-015-D | $286.00 | 15:1 | 15.5:1 | 117 | 1 | 56C | D | 2.37 | 900 | 900 | 84 | 38 | 2.64 | 2.22 | 1249 | 1.55 | 1.30 | 732 | |
| WG-237-015-H | $359.00 | | | | | 56C | H | | | | | 36 | | | | | | | |
| WG-237-015-R | $303.00 | | | | | 56C | L | | | | | 37 | | | | | | | |
| WG-237-015-L | $300.00 | | | | | 56C | R | | | | | 37 | | | | | | | |
| WG-237-020-D | $286.00 | 20:1 | 20:1 | 88 | 1 | 56C | D | 2.37 | 900 | 900 | 82 | 38 | 2.06 | 1.69 | 1195 | 1.36 | 1.12 | 791 | |
| WG-237-020-H | $359.00 | | | | | 56C | H | | | | | 36 | | | | | | | |
| WG-237-020-R | $303.00 | | | | | 56C | L | | | | | 37 | | | | | | | |
| WG-237-020-L | $300.00 | | | | | 56C | R | | | | | 37 | | | | | | | |
| WG-237-040-D | $286.00 | 40:1 | 40:1 | 44 | 0.5 | 56C | D | 2.37 | 900 | 900 | 71 | 38 | 1.45 | 1.02 | 1483 | 0.83 | 0.58 | 845 | |
| WG-237-040-H | $359.00 | | | | | 56C | H | | | | | 36 | | | | | | | |
| WG-237-040-R | $303.00 | | | | | 56C | L | | | | | 37 | | | | | | | |
| WG-237-040-L | $300.00 | | | | | 56C | R | | | | | 37 | | | | | | | |
| WG-237-060-D | $286.00 | 60:1 | 60:1 | 29 | 0.5 | 56C | D | 2.37 | 900 | 900 | 61 | 38 | 0.86 | 0.53 | 1149 | 0.63 | 0.39 | 844 | |
| WG-237-060-H | $359.00 | | | | | 56C | H | | | | | 36 | | | | | | | |
| WG-237-060-R | $303.00 | | | | | 56C | L | | | | | 37 | | | | | | | |
| WG-237-060-L | $300.00 | | | | | 56C | R | | | | | 37 | | | | | | | |
| WG-262-005-D | $306.00 | 5:1 | 5.25:1 | 350 | 3 | 182TC | D | 2.62 | 1000 | 1000 | 93 | 57 | 5.24 | 4.86 | 924 | 4.32 | 4.00 | 761 | 17 |
| WG-262-005-H | $442.00 | | | | | 182TC | H | | | | | 58 | | | | | | | |
| WG-262-005-R | $327.00 | | | | | 182TC | L | | | | | 56 | | | | | | | |
| WG-262-005-L | $322.00 | | | | | 182TC | R | | | | | 56 | | | | | | | |
| WG-262-010-D | $306.00 | 10:1 | 10.67:1 | 175 | 2 | 182TC | D | 2.62 | 1000 | 1000 | 90 | 57 | 4.17 | 3.74 | 1445 | 3.06 | 2.75 | 1061 | |
| WG-262-010-H | $442.00 | | | | | 182TC | H | | | | | 57 | | | | | | | |
| WG-262-010-R | $327.00 | | | | | 182TC | L | | | | | 56 | | | | | | | |
| WG-262-010-L | $322.00 | | | | | 182TC | R | | | | | 56 | | | | | | | |

1) Nominal Motor HP is the highest hp 1800 rpm motor to be used with the gearbox under conditions of 1.0 service factor. Gearbox input power capacity decreases as motor speed decreases and as service factor increases.
2) Output Type: D = Dual Shaft; H = Hollow Bore; R = Right-Hand Shaft; L = Left-Hand Shaft
3) The Center Distance is the distance between the centerlines of the input and output shafts.
4) Overhung Load ratings are for forces perpendicular to the output shaft and located at the shaft midpoint, such as from a gear, pulley, or sprocket with a belt or chain. Divide OHL ratings by the applicable OHL K factors shown separately in the Selection Factors tables. OHL ratings should also be divided by applicable service factors.
5) Thrust Load ratings are for forces along the axis of the output shaft, usually encountered in vertical-drive applications from agitators, mixers, fans, blowers, etc.
6) Maximum Mechanical Ratings are limits based on strength and durability of gearbox components; applicable when operating time is short and stopped time is greater than or equal to operating time. These ratings are applicable for 1.0 service factor loads, and may require modification depending upon characteristics of the applicable driven loads. Refer to the "Service Factors" table for more information.
7) Maximum Thermal Ratings are limits for gearbox continuous use without overheating.
* Maximum Input Speed is 2500 rpm.

# IronHorse® Cast-Iron Worm Gearboxes

## Specifications (continued)

**IronHorse Cast-Iron Worm Gearbox Specifications**

| Part Number * | Price | Nominal Ratio | Actual Ratio | Output RPM @ 1750 RPM Input | Nominal Motor HP [1] @ 1800 RPM | NEMA Motor Frame | Output Type [2] | Center Distance [3] (in) | Overhung Load [4] (lb) | Thrust Load [5] (lb) | Efficiency (%) | Approx Weight (lb) | Maximum Ratings @ 1750 RPM Input * | | | | | | Maximum Backlash (arc-minute) |
|---|---|---|---|---|---|---|---|---|---|---|---|---|---|---|---|---|---|---|---|
| | | | | | | | | | | | | | Mechanical [6] | | | Thermal [7] | | | |
| | | | | | | | | | | | | | Input Power (hp) | Output Power (hp) | Output Torque (lb-in) | Input Power (hp) | Output Power (hp) | Output Torque (lb-in) | |
| WG-262-015-D | $306.00 | 15:1 | 15.5:1 | 117 | 2 | 56C | D | 2.62 | 1000 | 1000 | 87 | 50 | 3.22 | 2.81 | 1577 | 2.47 | 2.16 | 1212 | 17 |
| WG-262-015-H | $442.00 | | | | | 56C | H | | | | | 50 | | | | | | | |
| WG-262-015-R | $327.00 | | | | | 56C | L | | | | | 49 | | | | | | | |
| WG-262-015-L | $322.00 | | | | | 56C | R | | | | | 49 | | | | | | | |
| WG-262-020-D | $306.00 | 20:1 | 19.5:1 | 88 | 1.5 | 56C | D | 2.62 | 1000 | 1000 | 83 | 50 | 2.67 | 2.21 | 1563 | 1.84 | 1.53 | 1078 | |
| WG-262-020-H | $442.00 | | | | | 56C | H | | | | | 50 | | | | | | | |
| WG-262-020-R | $327.00 | | | | | 56C | L | | | | | 49 | | | | | | | |
| WG-262-020-L | $322.00 | | | | | 56C | R | | | | | 49 | | | | | | | |
| WG-262-040-D | $306.00 | 40:1 | 40:1 | 44 | 0.75 | 56C | D | 2.62 | 1000 | 1000 | 72 | 50 | 1.85 | 1.32 | 1919 | 1.11 | 0.80 | 1153 | |
| WG-262-040-H | $442.00 | | | | | 56C | H | | | | | 50 | | | | | | | |
| WG-262-040-R | $327.00 | | | | | 56C | L | | | | | 49 | | | | | | | |
| WG-262-040-L | $322.00 | | | | | 56C | R | | | | | 49 | | | | | | | |
| WG-262-060-D | $306.00 | 60:1 | 60:1 | 29 | 0.75 | 56C | D | 2.62 | 1000 | 1000 | 66 | 50 | 1.16 | 0.77 | 1670 | 0.94 | 0.62 | 1346 | |
| WG-262-060-H | $442.00 | | | | | 56C | H | | | | | 51 | | | | | | | |
| WG-262-060-R | $327.00 | | | | | 56C | L | | | | | 49 | | | | | | | |
| WG-262-060-L | $322.00 | | | | | 56C | R | | | | | 49 | | | | | | | |

1) Nominal Motor HP is the highest hp 1800 rpm motor to be used with the gearbox under conditions of 1.0 service factor. Gearbox input power capacity decreases as motor speed decreases and as service factor increases.
2) Output Type: D = Dual Shaft; H = Hollow Bore; R = Right-Hand Shaft; L = Left-Hand Shaft
3) The Center Distance is the distance between the centerlines of the input and output shafts.
4) Overhung Load ratings are for forces perpendicular to the output shaft and located at the shaft midpoint, such as from a gear, pulley, or sprocket with a belt or chain. Divide OHL ratings by the applicable OHL K factors shown separately in the Selection Factors tables. OHL ratings should also be divided by applicable service factors.
5) Thrust Load ratings are for forces along the axis of the output shaft, usually encountered in vertical-drive applications from agitators, mixers, fans, blowers, etc.
6) Maximum Mechanical Ratings are limits based on strength and durability of gearbox components; applicable when operating time is short and stopped time is greater than or equal to operating time. These ratings are applicable for 1.0 service factor loads, and may require modification depending upon characteristics of the applicable driven loads. Refer to the "Service Factors" table for more information.
7) Maximum Thermal Ratings are limits for gearbox continuous use without overheating.
* Maximum Input Speed is 2500 rpm.

# IronHorse® Cast-Iron Worm Gearboxes

## Specifications (continued)

**IronHorse Cast-Iron Worm Gearbox Specifications**

| Part Number * | Price | Nominal Ratio | Actual Ratio | Output RPM @ 1750 RPM Input | Nominal Motor HP [1] @ 1800 RPM | NEMA Motor Frame | Output Type [2] | Center Distance [3] (in) | Overhung Load [4] (lb) | Thrust Load [5] (lb) | Efficiency (%) | Approx Weight (lb) | Maximum Ratings @ 1750 RPM Input * | | | | | | Maximum Backlash (arc-minute) |
|---|---|---|---|---|---|---|---|---|---|---|---|---|---|---|---|---|---|---|---|
| | | | | | | | | | | | | | Mechanical [6] | | | Thermal [7] | | | |
| | | | | | | | | | | | | | Input Power (hp) | Output Power (hp) | Output Torque (lb-in) | Input Power (hp) | Output Power (hp) | Output Torque (lb-in) | |
| WG-325-010-DC | $483.00 | 10:1 | 10.33:1 | 169 | 5 | 182/4TC | D | 3.25 | 1200 | 1100 | 90 | 91 | 7.19 | 6.46 | 2419 | 4.63 | 4.16 | 1558 | 15 |
| WG-325-010-HC | $633.00 | | | | | 182/4TC | H | | | | | 90 | | | | | | | |
| WG-325-010-LC | $483.00 | | | | | 182/4TC | L | | | | | 90 | | | | | | | |
| WG-325-010-RC | $483.00 | | | | | 182/4TC | R | | | | | 90 | | | | | | | |
| WG-325-015-DC | $483.00 | 15:1 | 15.5:1 | 113 | 5 | 182/4TC | D | 3.25 | 1200 | 1100 | 85 | 91 | 5.45 | 4.65 | 2611 | 3.19 | 2.72 | 1527 | |
| WG-325-015-HC | $633.00 | | | | | 182/4TC | H | | | | | 90 | | | | | | | |
| WG-325-015-LC | $483.00 | | | | | 182/4TC | L | | | | | 90 | | | | | | | |
| WG-325-015-RC | $483.00 | | | | | 182/4TC | R | | | | | 90 | | | | | | | |
| WG-325-020-DC | $483.00 | 20:1 | 19.5:1 | 90 | 3 | 182TC | D | 3.25 | 1200 | 1100 | 86 | 91 | 4.74 | 4.07 | 2875 | 3.31 | 2.85 | 2011 | |
| WG-325-020-HC | $633.00 | | | | | 182TC | H | | | | | 90 | | | | | | | |
| WG-325-020-LC | $483.00 | | | | | 182TC | L | | | | | 90 | | | | | | | |
| WG-325-020-RC | $483.00 | | | | | 182TC | R | | | | | 90 | | | | | | | |
| WG-325-030-DA | $483.00 | 30:1 | 30:1 | 58 | 2 | 56C | D | 3.25 | 1200 | 1100 | 77 | 88 | 3.66 | 2.80 | 3045 | 2.00 | 1.53 | 1661 | |
| WG-325-030-DB | $483.00 | | | 90 | | 145TC | D | | | | | 88 | | | | | | | |
| WG-325-030-HA | $633.00 | | | 58 | | 56C | H | | | | | 87 | | | | | | | |
| WG-325-030-HB | $633.00 | | | | | 145TC | H | | | | | 87 | | | | | | | |
| WG-325-030-LA | $483.00 | | | | | 56C | L | | | | | 87 | | | | | | | |
| WG-325-030-LB | $483.00 | | | | | 145TC | L | | | | | 87 | | | | | | | |
| WG-325-030-LC | $483.00 | | | | 3 | 182TC | L | | | | | 87 | | | | | | | |
| WG-325-030-RA | $483.00 | | | | 2 | 56C | R | | | | | 87 | | | | | | | |
| WG-325-030-RB | $483.00 | | | | | 145TC | R | | | | | 87 | | | | | | | |
| WG-325-030-RC | $483.00 | | | | 3 | 182TC | R | | | | | 87 | | | | | | | |

1) Nominal Motor HP is the highest hp 1800 rpm motor to be used with the gearbox under conditions of 1.0 service factor. Gearbox input power capacity decreases as motor speed decreases and as service factor increases.
2) Output Type: D = Dual Shaft; H = Hollow Bore; R = Right-Hand Shaft; L = Left-Hand Shaft
3) The Center Distance is the distance between the centerlines of the input and output shafts.
4) Overhung Load ratings are for forces perpendicular to the output shaft and located at the shaft midpoint, such as from a gear, pulley, or sprocket with a belt or chain. Divide OHL ratings by the applicable OHL K factors shown separately in the Selection Factors tables. OHL ratings should also be divided by applicable service factors.
5) Thrust Load ratings are for forces along the axis of the output shaft, usually encountered in vertical-drive applications from agitators, mixers, fans, blowers, etc.
6) Maximum Mechanical Ratings are limits based on strength and durability of gearbox components; applicable when operating time is short and stopped time is greater than or equal to operating time. These ratings are applicable for 1.0 service factor loads, and may require modification depending upon characteristics of the applicable driven loads. Refer to the "Service Factors" table for more information.
7) Maximum Thermal Ratings are limits for gearbox continuous use without overheating.
* Maximum Input Speed is 2500 rpm.

# IronHorse® Cast-Iron Worm Gearboxes

## Specifications (continued)

### IronHorse Cast-Iron Worm Gearbox Specifications

| Part Number * | Price | Nominal Ratio | Actual Ratio | Output RPM @ 1750 RPM Input | Nominal Motor HP [1] @ 1800 RPM | NEMA Motor Frame | Output Type [2] | Center Distance [3] (in) | Overhung Load [4] (lb) | Thrust Load [5] (lb) | Efficiency (%) | Approx Weight (lb) | Maximum Ratings @ 1750 RPM Input * | | | | | | Maximum Backlash (arc-minute) |
|---|---|---|---|---|---|---|---|---|---|---|---|---|---|---|---|---|---|---|---|
| | | | | | | | | | | | | | Mechanical [6] | | | Thermal [7] | | | |
| | | | | | | | | | | | | | Input Power (hp) | Output Power (hp) | Output Torque (lb-in) | Input Power (hp) | Output Power (hp) | Output Torque (lb-in) | |
| WG-325-040-DA | $483.00 | 40:1 | 40:1 | 44 | 2 | 56C | D | 3.25 | 1200 | 1100 | 76 | 88 | 3.35 | 2.55 | 3692 | 1.96 | 1.49 | 2156 | 15 |
| WG-325-040-DB | $483.00 | | | | | 145TC | D | | | | | 88 | | | | | | | |
| WG-325-040-HA | $633.00 | | | | | 56C | H | | | | | 87 | | | | | | | |
| WG-325-040-HB | $633.00 | | | | | 145TC | H | | | | | 87 | | | | | | | |
| WG-325-040-LA | $483.00 | | | | | 56C | L | | | | | 87 | | | | | | | |
| WG-325-040-LB | $483.00 | | | | | 145TC | L | | | | | 87 | | | | | | | |
| WG-325-040-RA | $483.00 | | | | | 56C | R | | | | | 87 | | | | | | | |
| WG-325-040-RB | $483.00 | | | | | 145TC | R | | | | | 87 | | | | | | | |
| WG-325-060-DA | $483.00 | 60:1 | 60:1 | 29 | 2 | 56C | D | 3.25 | 1200 | 1100 | 71 | 88 | 2.03 | 1.44 | 3127 | 1.61 | 1.14 | 2476 | |
| WG-325-060-DB | $483.00 | | | | | 145TC | D | | | | | 88 | | | | | | | |
| WG-325-060-HA | $633.00 | | | | | 56C | H | | | | | 87 | | | | | | | |
| WG-325-060-HB | $633.00 | | | | | 145TC | H | | | | | 87 | | | | | | | |
| WG-325-060-LA | $483.00 | | | | | 56C | L | | | | | 87 | | | | | | | |
| WG-325-060-LB | $483.00 | | | | | 145TC | L | | | | | 87 | | | | | | | |
| WG-325-060-RA | $483.00 | | | | | 56C | R | | | | | 87 | | | | | | | |
| WG-325-060-RB | $483.00 | | | | | 145TC | R | | | | | 87 | | | | | | | |

1) Nominal Motor HP is the highest hp 1800 rpm motor to be used with the gearbox under conditions of 1.0 service factor. Gearbox input power capacity decreases as motor speed decreases and as service factor increases.
2) Output Type: D = Dual Shaft; H = Hollow Bore; R = Right-Hand Shaft; L = Left-Hand Shaft
3) The Center Distance is the distance between the centerlines of the input and output shafts.
4) Overhung Load ratings are for forces perpendicular to the output shaft and located at the shaft midpoint, such as from a gear, pulley, or sprocket with a belt or chain. Divide OHL ratings by the applicable OHL K factors shown separately in the Selection Factors tables. OHL ratings should also be divided by applicable service factors.
5) Thrust Load ratings are for forces along the axis of the output shaft, usually encountered in vertical-drive applications from agitators, mixers, fans, blowers, etc.
6) Maximum Mechanical Ratings are limits based on strength and durability of gearbox components; applicable when operating time is short and stopped time is greater than or equal to operating time. These ratings are applicable for 1.0 service factor loads, and may require modification depending upon characteristics of the applicable driven loads. Refer to the "Service Factors" table for more information.
7) Maximum Thermal Ratings are limits for gearbox continuous use without overheating.
* Maximum Input Speed is 2500 rpm.

## Gearbox Selection Factors

### Overhung Load K Factors for Various Drive Types

| | |
|---|---|
| Chain & Sprocket | 1.00 |
| Gear | 1.25 |
| V-belt | 1.50 |
| Flat Belt | 2.50 |
| Variable Pitch Belt | 3.50 |

Divide gearbox OHL ratings by the applicable OHL K factors.

### Service Factors for Selecting Gearboxes (when used with electric motors)

| Service Continuity (per day) | Load Characteristics | | | |
|---|---|---|---|---|
| | Uniform | Moderate Shock* | Heavy Shock* | Extreme Shock* |
| Occasional 1/2 hour | 1.00 | 1.00 | 1.00 | 1.25 |
| Less than 3 hours | 1.00 | 1.00 | 1.25 | 1.50 |
| 3-10 hours | 1.00 | 1.25 | 1.50 | 1.75 |
| More than 10 hours | 1.25 | 1.50 | 1.75 | 2.00 |

* Shock results from sudden increases in the torque demand of the load, such as: sudden stopping, restarting, and/or reversing; significantly heavy loads dropped onto a moving conveyor; impact loads such as punch press operations.

Depending upon the load characteristics, divide the gearbox HP, Overhung Load, and Maximum Mechanical Capacity ratings by the applicable service factor.

# IronHorse® Cast-Iron Worm Gearboxes

## Gearbox Dimensions – Cast-Iron Solid-Shaft Output Gearboxes

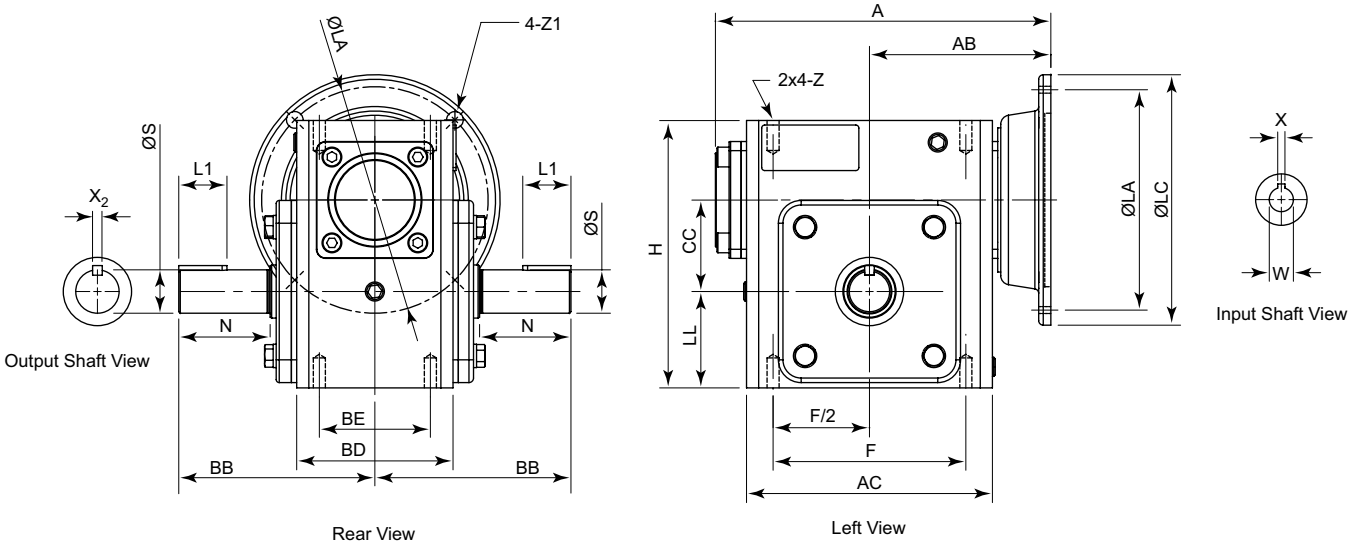


| Dimensions (inches) – IronHorse Cast-Iron Worm Gearboxes – Solid-Shaft Outputs | | | | | | | | | | | | | | | | | | | | | |
|---|---|---|---|---|---|---|---|---|---|---|---|---|---|---|---|---|---|---|---|---|---|
| Part Number | Frame | A | AB | AC | BB | BD | BE | CC | F | H | LL | Z (UNC) | Flange | | | Input Shaft | | Output Shaft | | | |
| | | | | | | | | | | | | | LA | LC | Z1 | W | X | L1 | N | S | $X_2$ |
| WG-175-xxx-D/L/R | 56C | 7.29 | 4.035 | 5.06 | 4.311 | 3.56 | 2.75 | 1.75 | 4.188 | 5.75 | 2.062 | 5/16-18 | 5.875 | 6.496 | 0.433 | 5/8 | 3/16 | 1 | 1.781 | 7/8 | 3/16 |
| WG-206-xxx-D/L/R | | 7.95 | 4.37 | 5.75 | 4.69 | 3.82 | 2.88 | 2.062 | 5 | 6.38 | 2.281 | 3/8-16 | | | | | | 1.25 | 2.09 | 1 | 1/4 |
| WG-237-xxx-D/L/R | | 8.71 | 4.705 | 6.38 | 5.087 | 4.06 | 2.88 | 2.375 | 5 | 6.94 | 2.5 | | | | | | | 1.25 | 2.37 | 1-1/8 | |
| WG-262-005-D/L/R | 182TC | 10.57 | 6.24 | 7.17 | 5.63 | 4.69 | 3.375 | 2.625 | 6.375 | 8 | 2.938 | | 7.25 | 9 | 0.551 | 1-1/8 | 1/4 | 2 | 2.626 | | |
| WG-262-010-D/L/R | | | | | | | | | | | | | | | | | | | | | |
| WG-262-015-D/L/R | 56C | 9.41 | 5.059 | | | | | | | | | | 5.875 | 6.496 | 0.433 | 5/8 | 3/16 | | | | |
| WG-262-020-D/L/R | | | | | | | | | | | | | | | | | | | | | |
| WG-262-040-D/L/R | | | | | | | | | | | | | | | | | | | | | |
| WG-262-060-D/L/R | | | | | | | | | | | | | | | | | | | | | |
| WG-325-010-xC | 182/4TC | 12.60 | 7.24 | 9.02 | 7.06 | 5.75 | 4.00 | 3.25 | 7.50 | 9.38 | 3.50 | 7/16-14 | 7.25 | 9.00 | 0.55 | 1-1/8 | 1/4 | 2.44 | 3.25 | 1-3/8 | 5/16 |
| WG-325-015-xC | | | | | | | | | | | | | | | | | | | | | |
| WG-325-020-xC | 182TC | | | | | | | | | | | | | | | | | | | | |
| WG-325-030-xA | 56C | 11.42 | 6.06 | | | | | | | | | | 5.875 | 6.50 | 0.41 | 5/8 | 3/16 | | | | |
| WG-325-030-xB | 145TC | | | | | | | | | | | | | | | 7/8 | | | | | |
| WG-325-030-xC | 182TC | 12.60 | 7.24 | | | | | | | | | | 7.25 | 9.00 | 0.55 | 1-1/8 | 1/4 | | | | |
| WG-325-040-xA | 56C | 11.42 | 6.06 | | | | | | | | | | 5.875 | 6.50 | 0.41 | 5/8 | 3/16 | | | | |
| WG-325-040-xB | 145TC | | | | | | | | | | | | | | | 7/8 | | | | | |
| WG-325-060-xA | 56C | | | | | | | | | | | | | | | 5/8 | | | | | |
| WG-325-060-xB | 145TC | | | | | | | | | | | | | | | 7/8 | | | | | |

**Dual-shaft output gearboxes have BB, L1, N, S, $X_2$ dimensions on both sides.**
**Left-hand shaft gearboxes have output shafts only on the left side, as viewed looking into the input shaft (dimensions BB, L1, N, S, $X_2$ ).**
**Right-hand shaft gearboxes have output shafts only on the right side, as viewed looking into the input shaft (dimensions BB, L1, N, S, $X_2$).**
**See our website: www.AutomationDirect.com for complete engineering drawings.**

# IronHorse® Cast-Iron Worm Gearboxes

## Gearbox Dimensions – Cast-Iron Hollow-Bore Output Gearboxes

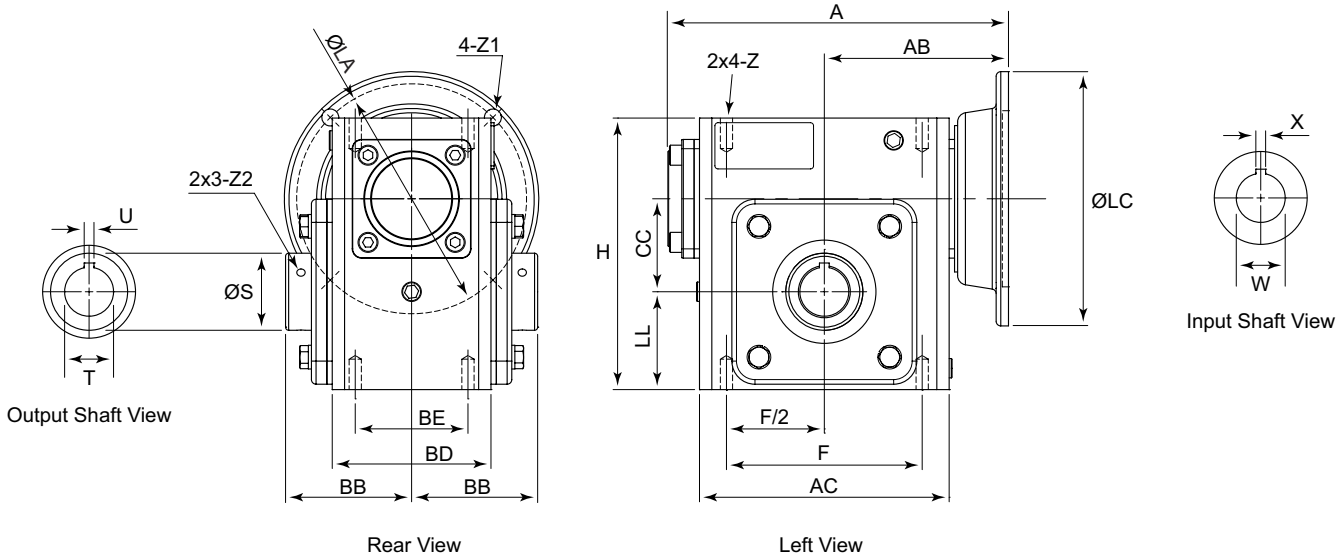


| Dimensions (inches) – IronHorse Cast-Iron Worm Gearboxes – Hollow-Bore Outputs | | | | | | | | | | | | | | | | | | | | | |
|---|---|---|---|---|---|---|---|---|---|---|---|---|---|---|---|---|---|---|---|---|---|
| | | | | | | | | | | | | | Flange | | | Input Shaft | | Output Bore | | | |
| Part Number | Frame | A | AB | AC | BB | BD | BE | CC | F | H | LL | Z (UNC) | LA | LC | Z1 | W | X | S | T | U | Z2 (UNF) |
| WG-175-xxx-H | 56C | 7.28 | 4.035 | 5.059 | 3.091 | 3.563 | 2.750 | 1.75 | 4.188 | 5.75 | 2.062 | 3/8-16 | 5.875 | 6.496 | 0.433 | 5/8 | 3/16 | 1.575 | 1.0 | 1/4 | #10-32 |
| WG-206-xxx-H | | 7.95 | 4.370 | 5.748 | 3.219 | 3.819 | 2.880 | 2.062 | 5.000 | 6.375 | 2.281 | | | | | | | 1.772 | 1.125 | | 1/4-28 |
| WG-237-xxx-H | | 8.68 | 4.705 | 6.378 | 3.220 | 4.055 | 2.880 | 2.375 | 5.000 | 6.937 | 2.500 | | | | | | | 1.969 | 1.250 | | |
| WG-262-005-H | 182TC | 10.59 | 6.240 | 7.165 | 3.500 | 4.685 | 3.375 | 2.625 | 6.375 | 8.000 | 2.938 | | 7.25 | 9.000 | 0.551 | 1-1/8 | 1/4 | 2.362 | 1.437 | 3/8 | |
| WG-262-010-H | | | | | | | | | | | | | | | | | | | | | |
| WG-262-015-H | 56C | 9.41 | 5.059 | | | | | | | | | | 5.875 | 6.496 | 0.433 | 5/8 | 3/16 | | | | |
| WG-262-020-H | | | | | | | | | | | | | | | | | | | | | |
| WG-262-040-H | | | | | | | | | | | | | | | | | | | | | |
| WG-262-060-H | | | | | | | | | | | | | | | | | | | | | |
| WG-325-010-HC | 182/4TC | 12.60 | 7.24 | 9.02 | 4.38 | 5.75 | 4.00 | 3.25 | 7.50 | 9.38 | 3.50 | 7/16-14 | 7.25 | 9.00 | 0.55 | 1.125 | 1/4 | 2.76 | 1.938 | 1/2 | 5/16-24 |
| WG-325-015-HC | | | | | | | | | | | | | | | | | | | | | |
| WG-325-020-HC | 182TC | | | | | | | | | | | | | | | | | | | | |
| WG-325-030-HA | 56C | 11.42 | 6.06 | | | | | | | | | | 5.875 | 6.50 | 0.41 | 0.625 | 3/16 | | | | |
| WG-325-030-HB | 145TC | | | | | | | | | | | | | | | 0.875 | | | | | |
| WG-325-040-HA | 56C | | | | | | | | | | | | | | | 0.625 | | | | | |
| WG-325-040-HB | 145TC | | | | | | | | | | | | | | | 0.875 | | | | | |
| WG-325-060-HA | 56C | | | | | | | | | | | | | | | 0.625 | | | | | |
| WG-325-060-HB | 145TC | | | | | | | | | | | | | | | 0.875 | | | | | |

**See our website: www.AutomationDirect.com for complete engineering drawings.**

# IronHorse® Cast-Iron Worm Gearboxes

## Accessories – Mounting Base

*IronHorse Worm Gearbox Mounting Base*

*Mounting Base Dimensions*

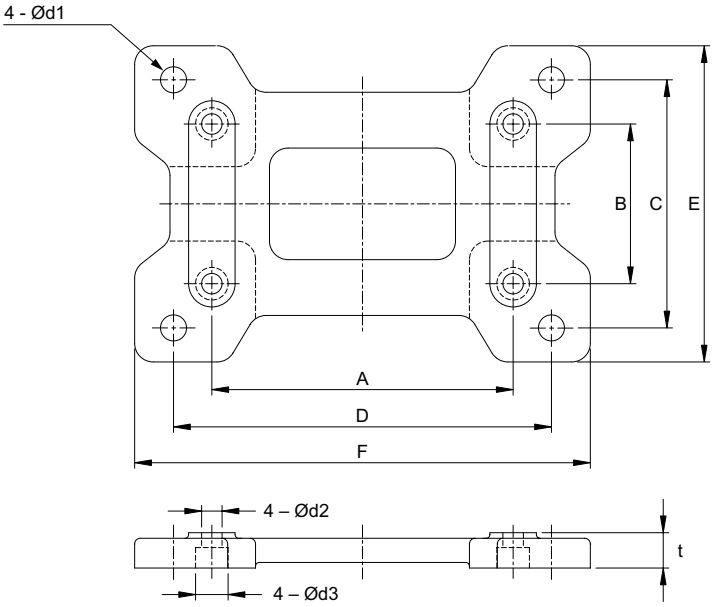


| IronHorse Cast-Iron Worm Gearbox Mounting Bases | | | | | | | | | | | | | |
|---|---|---|---|---|---|---|---|---|---|---|---|---|---|
| Part Number | Price | Fits Gearbox Numbers | Approx Weight (lb) | Dimensions (in) | | | | | | | | | |
| | | | | A | B | C | D | E | F | t | d1 | d2 | d3 |
| WG-175-BASE | $19.00 | WG-175-xxx-x | 4.0 | 4.19 | 2.76 | 4.50 | 5.75 | 5.69 | 7.00 | 0.69 | 0.43 | 0.35 | 0.55 |
| WG-206-BASE | $23.00 | WG-206-xxx-x | 4.8 | 5.00 | 2.88 | 4.69 | 6.38 | 5.91 | 7.76 | 0.72 | 0.47 | 0.43 | 0.69 |
| WG-237-BASE | $26.00 | WG-237-xxx-x | 6.2 | 5.00 | 2.88 | 4.88 | 7.06 | 6.22 | 8.50 | 0.75 | 0.47 | 0.43 | 0.69 |
| WG-262-BASE | $31.00 | WG-262-xxx-x | 7.5 | 6.38 | 3.38 | 5.25 | 8.00 | 6.69 | 9.65 | 0.75 | 0.55 | 0.43 | 0.69 |
| WG-325-BASE | $44.00 | WG-325-xxx-xx | 12 | 7.50 | 4.00 | 6.13 | 9.50 | 7.66 | 11.19 | 0.88 | 0.50 | 0.47 | 0.71 |

**See our website: www.AutomationDirect.com for complete engineering drawings.**

## Cast-Iron Worm Gearbox Cross Reference

| IronHorse Cast-Iron Worm Gearbox Cross Reference * | | | | | | | | | | |
|---|---|---|---|---|---|---|---|---|---|---|
| AutomationDirect IronHorse™ | WG-175-xxx- | | WG-206-xxx- | | WG-237-xxx- | | WG-262-xxx- | | WG-325-xxx- | |
| | D/L/R | H | D/L/R | H | D/L/R | H | D/L/R | H | D/L/R | H |
| Alling Lander | 17UF | 17YF | 20UF | 20YF | 23UF | 23YF | 26UF | 26YF | 32UF | 32YF |
| Baldor | F918 | HF918 | F921 | HF921 | F924 | HF924 | F926 | HF926 | F932 | HF932 |
| Boston | F718 | HF718 | F721 | HF721 | F724 | HF724 | F726 | HF726 | F732 | HF732 |
| Browning-Raider | Q175 | QH175 | Q206 | QH206 | Q237 | QH237 | Q262 | QH262 | Q325 | QH325 |
| Dodge-Tigear | Q175 | – | Q200 | – | – | – | Q262 | – | – | – |
| Falk-Omnibox | 1175WBM | 1175WBQM | 1206WBM | 1206WBQM | 1238WBM | 1238WBQM | 1262WBM | 1262WBQM | 1325WBM | 1325WBQM |
| Grove (new) | BMQ218 | HMQ218 | BMQ220 | HMQ220 | BMQ224 | HMQ224 | BMQ226 | HMQ226 | BMQ232 | HMQ232 |
| Grove (old) | BMQ1175 | HMQ1175 | BMQ1206 | HMQ1206 | BWQ1238 | HMQ1238 | BMQ1262 | HMQ1262 | BMQ1325 | HMQ1325 |
| Leeson | BMQ618 | HMQ618 | BMQ621 | HMQ621 | BMQ624 | HMQ624 | BMQ626 | HMQ626 | BMQ632 | HMQ632 |
| Morse Raider | 718F | 718SF | 721F | 721SF | 724F | 724SF | 726F | 726SF | 732F | 732SF |
| Ohio Gear | BMQ2175 | SM2175MQ | BMQ2206 | SM2206MQ | BMQ2238 | SM2238MQ | BMQ2262 | SM2262MQ | BMQ2325 | SM2325MQ |

*** IronHorse Series Gear Drives are designed to be functionally interchangeable with these and many other manufacturer's drives. This chart is intended to be a guide only. Customers should compare the appropriate manufacturer's specifications for exact details regarding ratings and dimensions.**

# IronHorse® Worm Gearboxes

## Gearbox Selection

***Gearbox Selection Steps***

1) Determine the torque and speed required for the load.
2) Determine the overall speed ratio of motor speed to load speed.
3) Determine the gearbox ratio as well as any reduction outside the gearbox (pulleys, gears, etc.).
4) Determine the applicable service factor and overhung load K factor.
5) Determine the gearbox real output torque required, and select a gearbox with a higher Maximum Thermal output Torque rating (for WG cast-iron gearboxes; not applicable for WGA aluminum gearboxes).
6) Determine the gearbox design output torque required (torque with service factor applied), and select a gearbox with a higher Maximum Mechanical Output Torque rating. (Gearbox must also meet requirement #5.)
7) Determine the required sizes of pulleys, gears, etc., and determine the overhung load force. Select a gearbox with a higher Overhung Load rating. (Gearbox must also meet requirements #5 & #6.)
8) Confirm that the selected gearbox meets the applicable system requirements.
9) Select a compatible motor.

***Gearbox Selection Example (Refer to the specifications tables for gearbox specifications, service factors, and K factors.)***

A conveyor will run 10 hours/day with moderate shock loading. The conveyor will be driven by a V-belt and needs to be driven at approximately 20 rpm. The motor to be used will have a nominal speed of 1800 rpm (1725 rpm actual speed). The conveyor will require 2700 in·lb of torque.

1) Required **torque** = 2700 in·lb; required **speed** = 20 rpm.
2) Determine the **overall speed ratio** of motor speed to load speed:
   Overall speed ratio = motor speed / load speed = 1725 / 20 = 86.25 [about 86:1]
3) Determine **pulley ratios** at available **gearbox ratios**:
   Gearbox ratio = (overall speed ratio) / (pulley ratio)
   Pulley ratio = (overall speed ratio) / (gearbox ratio)
   For ~~5:1 gearbox~~: pulley ratio = 86.25 / 5 = ~~17.25~~ [17.25" pulley ratio is prohibitively large]
   For 10:1 gearbox: pulley ratio = 86.25 / 10 = 8.63
   For 15:1 gearbox: pulley ratio = 86.25 / 15 = 5.75
   For 20:1 gearbox: pulley ratio = 86.25 / 20 = 4.31
   For 30:1 gearbox: pulley ratio = 86.25 / 30 = 2.88
   For 40:1 gearbox: pulley ratio = 86.25 / 40 = 2.16
   For 60:1 gearbox: pulley ratio = 86.25 / 60 = 1.44
   Pulley ratio = (conveyor pulley diameter) / (gearbox pulley diameter)
4) Determine **service factor (SF)** and **overhung load factor (K)** from applicable tables:
   SF = 1.25 due to moderate shock loading and 3-10 hours/day operation
   K = 1.5 due to V-belt
5) Use specifications table to select gearbox with **Maximum Thermal* Torque rating > required real torque**:
   Gearbox required real torque = (final torque) / (pulley ratio)
   For 10:1 gearbox: (2700 in·lb) / 8.63 = 312.86 in·lb; use WG-175-x or larger
   For 15:1 gearbox: (2700 in·lb) / 5.75 = 469.57 in·lb; use WG-175-x or larger
   For 20:1 gearbox: (2700 in·lb) / 4.31 = 626.45 in·lb; use WG-206-x or larger
   For 30:1 gearbox: (2700 in·lb) / 2.88 = 937.50 in·lb; use WG-325-x or WGA-63M*
   For 40:1 gearbox: (2700 in·lb) / 2.16 = 1250.0 in·lb; use WG-325-x
   For 60:1 gearbox: (2700 in·lb) / 1.44 = 1875.0 in·lb; use WG-325-x
   *** Aluminum gearboxes do not have thermal ratings; use mechanical ratings.**
6) Use specifications table to select gearbox with **Maximum Mechanical Torque rating > required design torque**:
   Gearbox required design torque = (real gearbox torque)(service factor)
   For 10:1 gearbox: (312.86 in·lb)(1.25) = 391.08 in·lb; use WG-175-x or larger
   For 15:1 gearbox: (469.57 in·lb)(1.25) = 586.96 in·lb; use WG-206-x or larger
   For 20:1 gearbox: (646.45 in·lb)(1.25) = 808.06 in·lb; use WG-206-x or larger
   For 30:1 gearbox: (937.50 in·lb)(1.25) = 1178.88 in·lb; use WG-325-x or WGA-63M or larger
   For 40:1 gearbox: (1250.0 in·lb)(1.25) = 1562.50 in·lb; use WG-325-x
   For 60:1 gearbox: (1875.0 in·lb)(1.25) = 2343.75 in·lb; use WG-325-x

(continued on next page)

***Gearbox Selection Example (continued)***
(Refer to the specifications tables for gearbox specifications, service factors, and K factors.)
[Load requirements: Conveyor to run 10 hours/day; moderate shock loading; driven by V-belt @ approx 20 rpm; requires 2700 in·lb of torque. Motor speed 1725 rpm (1800 rpm nominal).

7) Use the gearbox overhung load ratings from the specifications table to determine the minimum allowable pulley diameters.
Select gearbox with **Overhung Load rating > overhung load force**:
Gearbox required OHL rating = (gearbox real torque)(K)(SF)/(gearbox pulley diameter / 2)
Minimum gearbox pulley diameter = (T)(K)(SF)(2)/(OHL rating)
Conveyor pulley diameter = (gearbox pulley diameter)(pulley ratio)
For 10:1, WG-175-010-x gearbox:
Minimum gearbox pulley diameter = (312.86 in·lb)(1.5)(1.25)(2)/(650 lb) = 1.8" [use 2"]
Conveyor pulley diameter = (2")(8.63) = ~~17.26"~~ [17.26" pulley size is prohibitively large]
Determine pulley sizes and OHL for next larger gearbox ratio.
For 15:1, WG-206-015-x gearbox:
Minimum gearbox pulley diameter = (469.57 in·lb)(1.5)(1.25)(2)/(700 lb) = 2.5" [use 2.5"]
Conveyor pulley diameter = (2.5")(5.75) = 14.38" [use 14.4"]
Select **WG-206-015-x gearbox, 2.5" gearbox pulley**, and **14.4" conveyor pulley**.
For 20:1, WG-206-020-x gearbox:
N/A – larger ratio of same frame size GB is same price, yet provides lower efficiency and power characteristics
For 30:1, WGA-63M-030-H1 gearbox:
Minimum gearbox pulley diameter = (937.50 in·lb)(1.5)(1.25)(2)/(736 lb) = 4.78" [use 5"]
Conveyor pulley diameter = (5")(2.88) = 14.40" [use 14.4"]
N/A – WGA-63M & WG-325 gearboxes costs more than WG-206
For 40:1, N/A – WG-325-xxx gearboxes cost more than WG-206 at any ratio
For 60:1, N/A – WG-325-xxx gearboxes cost more than WG-206 at any ratio

8) **Check results** against original speed and torque requirements:
a) Conveyor speed = (motor speed) / (gearbox ratio)(pulley ratio) = (1725 rpm) / (15)(14.4"/2.5") = 20 rpm
b) Maximum real torque available at conveyor = (gearbox thermal torque)(pulley ratio) = (673 in·lb)(14.4"/2.5") = 3876 in·lb
c) Maximum design torque available at conveyor = (gearbox mechanical torque)(pulley ratio) / (service factor)
= (1002 in·lb)(14.4"/2.5") / 1.25 = 4617 in·lb
The speed is correct as required, and both maximum torque values are greater than the 2700 in·lb required by the load.

9) **Select a motor** and check torque transmitted to the load:
From the gearbox spec tables, WG-206-015-x efficiency = 85%.
maximum thermal input power = 1.40 hp
maximum mechanical input power @ 1.0 SF = 2.09 hp
maximum mechanical input power @ 1.25 SF = (rated max mechanical input power) / (SF) = 2.09 hp / 1.25 = 1.67 hp
maximum allowable motor power = 1.40 hp; select nominal 1hp motor
Select **1hp motor**, and check for adequate torque at the load:
Torque = Power / Speed **[conversion factor: (1hp) = (63,025 in·lb·rpm)]**
Torque load = (63,025 in·lb·rpm / hp)(gearbox input hp)(gearbox efficiency) / (motor rpm / (gearbox ratio)(pulley ratio))
= (63,025)(1)(0.85) / (1725 / (15/1)(14.4/2.5)) = ~~2683 in·lb~~ [insufficient torque at load]
This torque value is less than the 2700 in·lb required by the load.
So, select and check the next larger nominal motor size, which is 1-1/2 hp.
Since the 206 frame size 15 ratio gearboxes do not meet the 1-1/2 hp thermal rating, choose the WG-237-015-x gearbox.
Select **1-1/2 hp motor** and **WG-237-015-x gearbox**, and check for adequate torque:
WG-237-015-x gearbox efficiency = 84%
maximum thermal input power = 1.55 hp
maximum mechanical input power @ 1.25 SF = 2.64 hp / 1.25 = 2.11 hp
maximum allowable motor power = 1.55 hp; select nominal 1-1/2 hp motor
gearbox ratio is still 15:1, and OHL rating is increased to 900 lb, so the previous pulley calculations [step 7] remain sufficient
[smaller pulleys can be calculated and selected for this gearbox, if desired]
Tload = (63,025 in·lb·rpm/hp) (1.5hp) (84%) / (1725 rpm / (15/1)(14.4/2.5)) = 3977 in·lb > 2700 in·lb; sufficient torque at load

Final gearbox and motor selection: 1-1/2 hp motor WG-237-015-x gearbox